Directory

Chapter 1 Safety

⚠ Danger	⚠ Attention
·Only qualified personnel shall wire the drive, or it may cause electric shock. ·Perform the maintenance job after confirming that the charging LED is off or the DC Bus voltage is below 36V, or it may cause electric shock. ·Never wire the drive unless the input AC supply is totally disconnected, or it may cause electric shock. ·It is prohibited from changing internal parts or circuit.	·Don’t install the drive in places where water pipes may leak onto it. ·Don't allow screws, washers and other metal foreign matters to fall inside the drive, otherwise there is a danger of fire or damage; ·Don't install the drive under direct sunshine, otherwise it may be damaged; ·Don’t short circuit + and terminal (-), otherwise there is a danger offire or the drive may be damaged. ·Don’t apply supply voltage (AC 220V or higher) to control terminals except terminals Ra, Rb and Rc. ·PB and + are used to connect the brake resistor, do not shortcut them, or the brake unit may be damaged.

Chapter 2 Product introduction

In this chapter we introduce the basic product information of specifications, model, and structure and so on.

2.1 Nameplate Information

2.2 VFD Model Rule

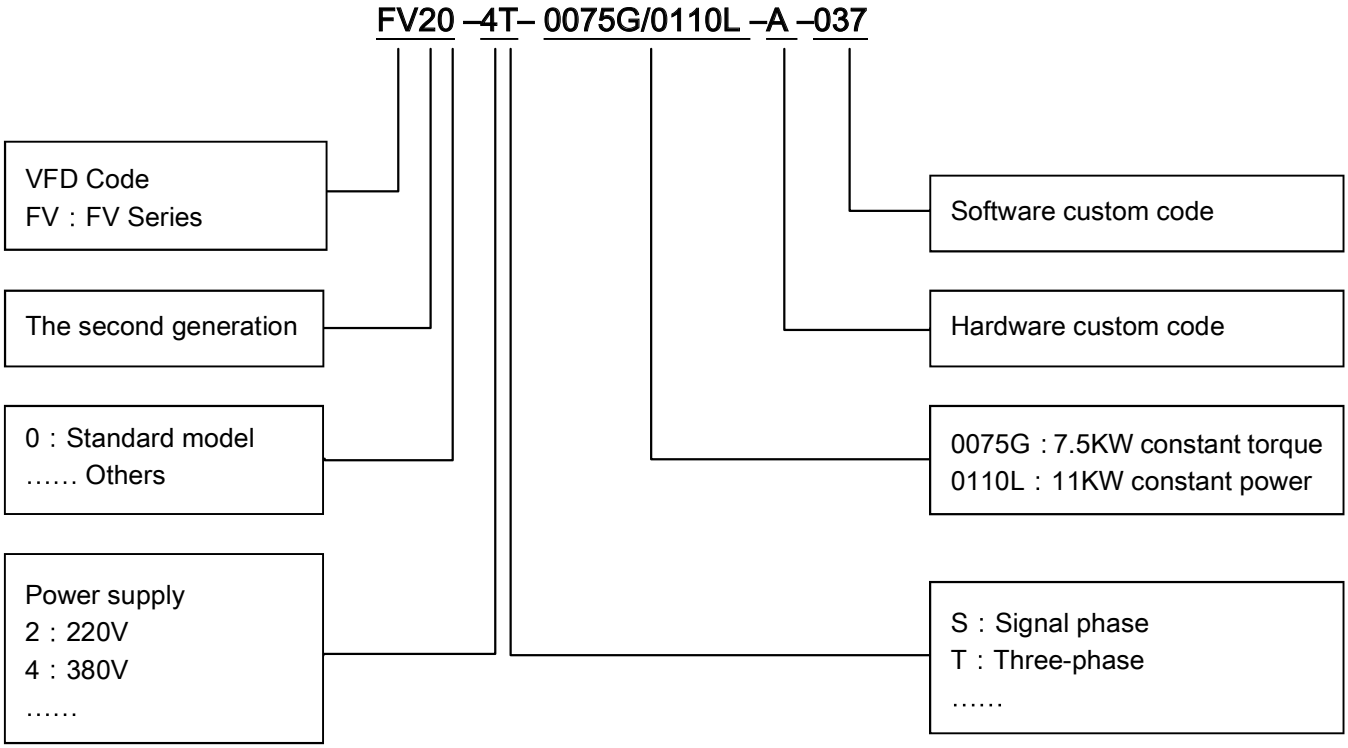

2.3 External dimension and weight

2.3.1 External dimension and weight

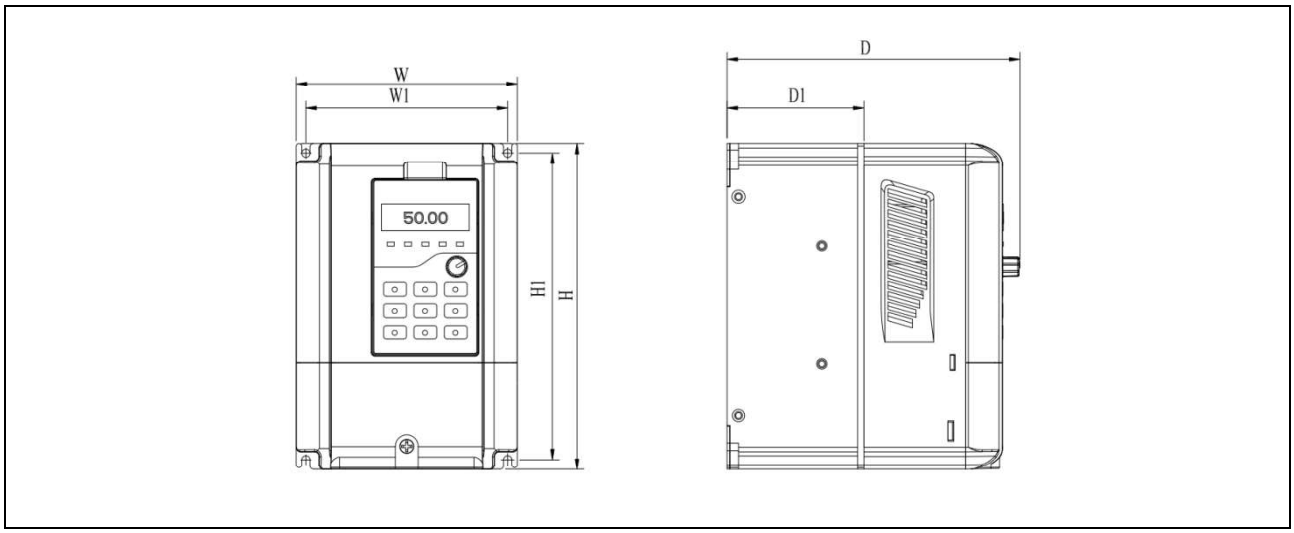

Fig 2-1FV20-4T-0185G/0220L and lower power VFD

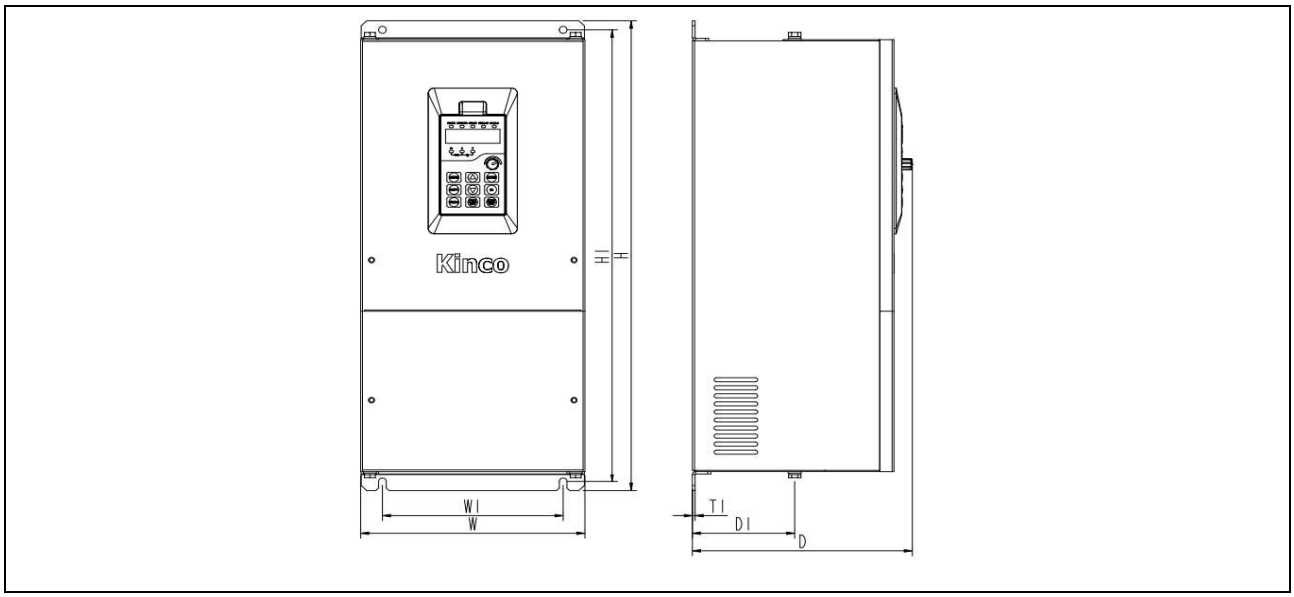

Fig 2-2FV20-4T-0220G/0300L～FV20-4T-8000G

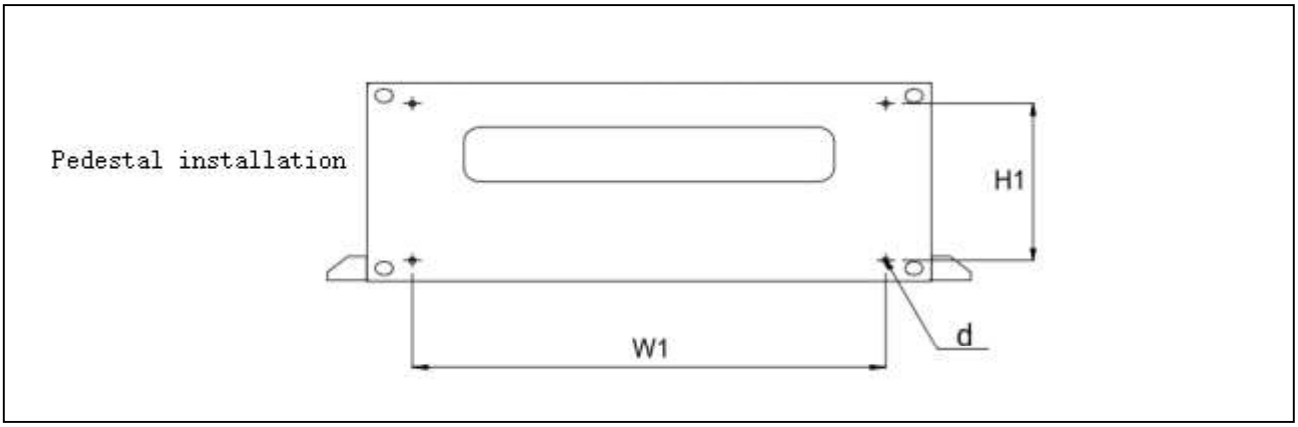

Fig 2-5 FV20-4T-1000G

Table 2-1 Mechanical parameters

VFD model (G.Constant torque load; L.Draught fan and water pump load)	External dimension and (mm)							Weight (kg)
	W	H	D	W1	H1	D1	Installation hole(d)	
FV20-4T-0007G/0015L	120	186	167	115	175	74.5	4.7	2
FV20-4T-0015G/0022L								
FV20-4T-0022G/0037L								
FV20-4T-0037G/0055L								
FV20-4T-0055G/0075L	140	256	181	131	243	91	5.8	6
FV20-4T-0075G/0110L								
FV20-4T-0110G/0150L	160	320	207	151	303	115	5.8	8
FV20-4T-0150G/0185L								
FV20-4T-0185G/0220L								
FV20-4T-0220G/0300L	206	471	201	166	453	94	7	18
FV20-4T-0300G/0370L								
FV20-4T-0370G/0450L	320	535	224	220	512	88.5	10	31
FV20-4T-0450G/0550L								
FV20-4T-0550G/0750L	373	649	262	240	628	102.5	10	42
FV20-4T-0750G/0900L								
FV20-4T-0900G/1100L	440	758	285	340	737	102	11	73
FV20-4T-1100G/1320L	430	780	330	280	755	168	11	76
FV20-4T-1320G/1600L								
FV20-4T-1600G/1850L	530	940	380	340	910	206	14	114
FV20-4T-1850G/2000L								
FV20-4T-2000G/2200L								
FV20-4T-2200G/2500L	690	1006	380	500	974	207	14	156
FV20-4T-2500G/2800L								
FV20-4T-2800G/3150L								
FV20-4T-3150G/3550L	810	1228	400	520	1196	209	14	225
FV20-4T-3550G/4000L								
FV20-4T-4000G/4500L								
FV20-4T-6000G	810	1328	400	520	1296	/	14	450
FV20-4T-8000G								
FV20-4T-10000G	1480	1807	600	Pedestal installation W1*H1=1040*440 d=14				460

2.3.2 Operation panel and installation box size

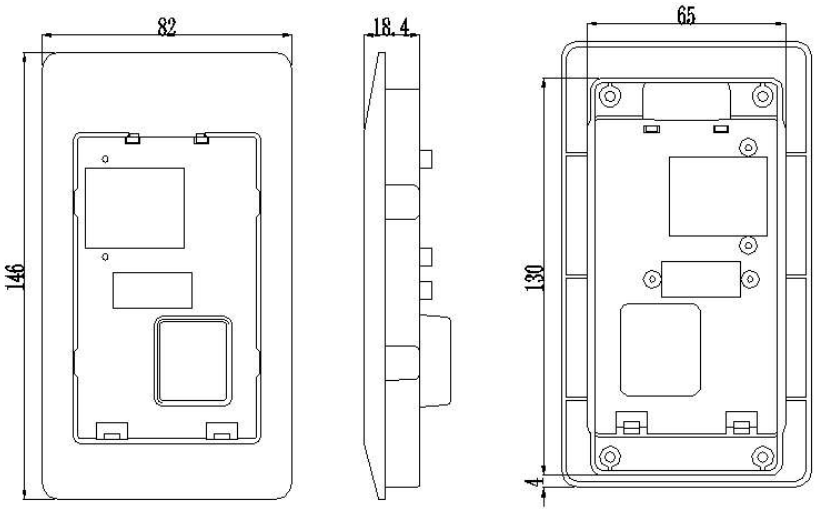

Fig 2-3 Installation box dimension

Note：
When the operation panel is mounted, the opening size of the tray is 65*130mm.

Chapter 3 Wiring Guide of VFD

3.1 Wiring and Configuration of Main circuit terminal

3.1.1 Terminal Type of Main Loop's Input and Output

Table 3-1 Description of main loop terminal

Terminal name	Function description
L、N	Single phase 220VAC input terminal
R、S、T	3-phase 380V AC input terminal
⊕、⊖	DC bus positive and negative terminal
⊕、PB	Braking resistor terminal
U、V、W	3-phase AC output terminal
PE	Shield PE terminal

3.1.2 Wiring of VFD for Basic Operation

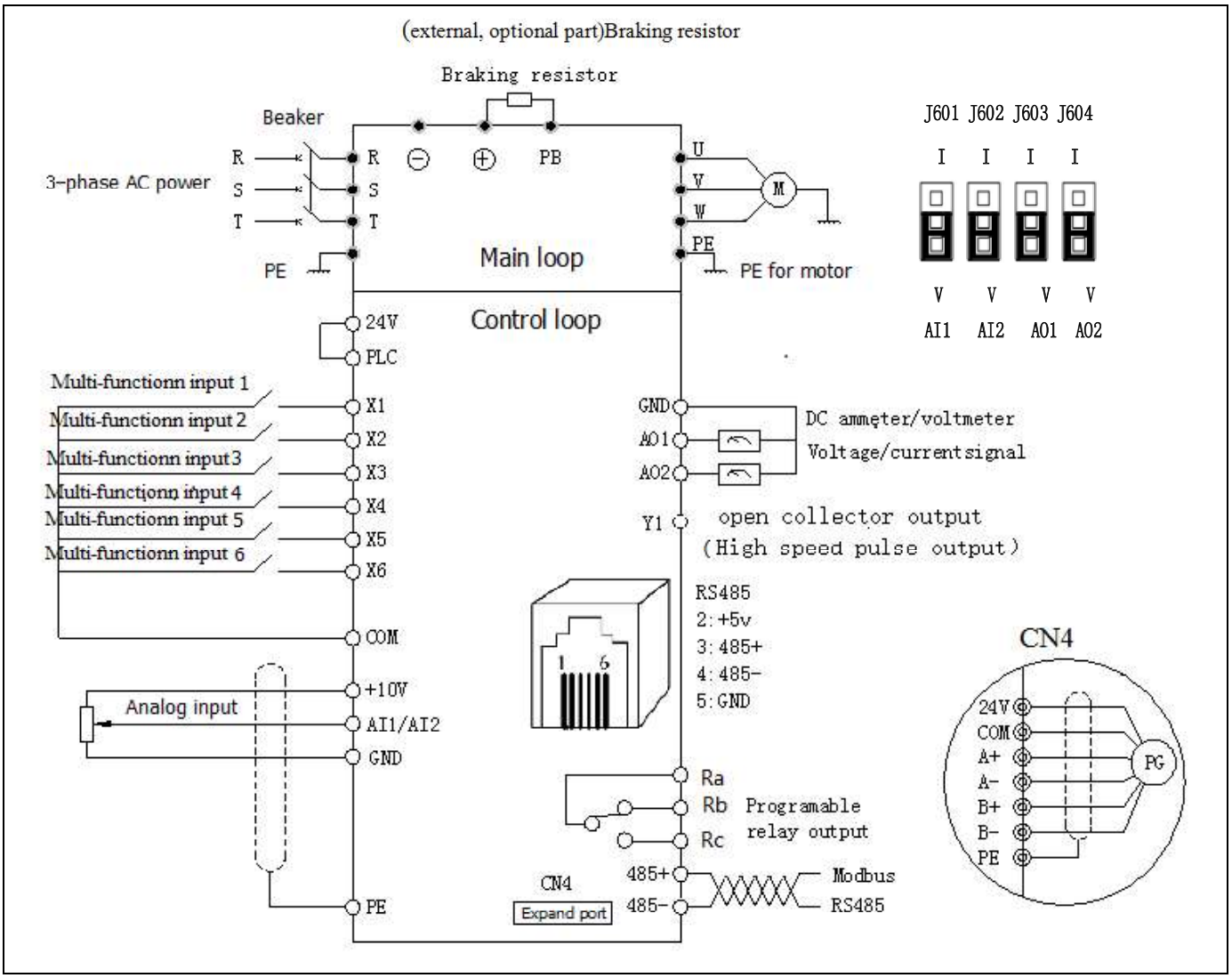

Fig.3-1 Basic wiring chart

3.2 Wiring and configuration of control circuit

3.2.1 Wiring of control circuit terminal.

Wire the terminals correctly before using the Drive. Refer to the table 3-2 for control circuit terminal function

Table 3-2 Control circuit terminal function

Sequence No.	Function
1	Analog input and output terminal, RS232 and RSRS485 communication port

Note:
It is recommended to use cables bigger than 1mm² to connect to the terminals.

Arrangement of control circuit terminals is as follows.

Ra	Rb	Rc

X1	X2	X3	X4	X5	COM	10V	GND	AI1	AI2
Y1	COM	X6	24V	PLC	AO1	AO2	GND	485+	485-

Fig.3-2 Arrangement of control terminals

Refer to table 3-3 for description of each terminal

Table 3-3 function list of each list

Category	Terminals	Name	Function description	Specification
Shield	⏚	Shielded PE	PE terminal connected to shielding layer. 485 communication cable, Analog signal cable, motor power cable shield can be connected to this terminal here	Connected to PE terminal of main loop inside
Power supply	+10	+10V Power supply	Provide +10V power supply	Maximum current output is5mA
	GND	+10V GND of Power supply	GND for analog signal and 10V power supply	Isolated from COM and CME inside
Analog input	AI1	Signal-ended input AI1	Can accept analog voltage or current input, jumper AI1 can select voltage or current input mode.(Reference ground. GND)	Input voltage range.-10V ~ 10V(Input impedance 45Ω)Resolution1/4000 Input current range.0mA ~ 20 mA,Resolution.1/2000(Need jumper)
	AI2	Signal-ended input AI2	Can accept analog voltage or current input, jumper AI2 can select voltage or current input mode.(Reference ground. GND)	
Analog output	AO1	Analog output 1	Providing analog voltage or current output, they are selected by the jumper AO1. The default setting is output voltage, refer to the function code A6.28 for detail.(Reference ground. GND)	Voltage output range.0V ~ 10V Current output range.0/4 ~ 20mA
	AO2	Analog output 2	Providing analog voltage or current output, they are selected by the jumper AO2. The default setting is output voltage, refer to the function code A6.29 for detail.(Reference ground.GND)	Voltage output range.0V ~ 10VCurrent output range.0/4 ~ 20mA
Communi-cation	RS485+	RS485 communication port	485+	StandardRS-485communication port, please use twisted-pair cable or shielded cable.
	RS485-		485-	
Multi-function input terminal	X1	Multi-function input terminal 1	Can be defined as multi-function digital input terminal. (Refer to the A6 group, form A6.00 to A6.06)	Optocoupler isolation input Input resist or. R=3.3kΩ Maximum frequency input of X1 ~ X5.200Hz 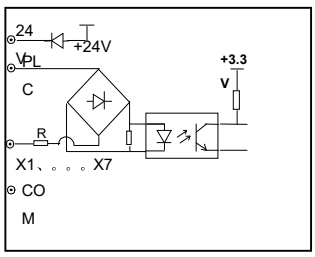 Maximum input frequency of X6.100kHz Input voltage range.2 ~ 30v
	X2	Multi-function input terminal 2		
	X3	Multi-function input terminal 3		
	X4	Multi-function input terminal 4		
	X5	Multi-function input terminal 5		
	X6	Multi-function input terminal 6		

Category	Terminals	Name	Function description	Specification
Multi-function output terminal	Y1	Open collector output terminal (High-speed pulse) output terminal	When defined as Open collector output terminal,refer to the A6.14 for detail,When defined as High-speed pulse output terminal,refer to A6.27 for detail.Maximum frequency could up to 100KHz	Optocoupler isolation output Maximum working voltage.30v Maximum output current.50mA
Power supply	+24V	+24V power supply	Providing +24V power for others	Maximumoutputcurrent.200mA
Common-port	PLC	Common port of multi-function input	Common port of Multi-function input (Short cut with 24V in default)	Common port of X1 ~ X6, PLC is isolated from 24V internally
	COM	Common port of 24V power supply	Three common ports in all, cooperate with other terminals	COM is isolated from CME and GND inside the drive
Relay output terminal 1	Ra	Relay output	Can be defined as multi-function relay output terminal(Refer to the A6.16 for detail)	Ra-Rb.Normally closed Ra-Rc.normally open Contact capacity . AC250V/2A(COSΦ = 1) AC250V/1A(COSΦ = 0.4) DC30V/1A Input voltage for over-voltage class of relay output terminal is over-voltage class II
	Rb			
	Rc			

Chapter 4 Operation Instructions of Kinco VFD

4.1 Using Operation Panel

4.1.1 Operation panel appearance and keys' function description

Operation panel is used to setup the drive and display parameters, it is LED display. As shown in Fig.4-1

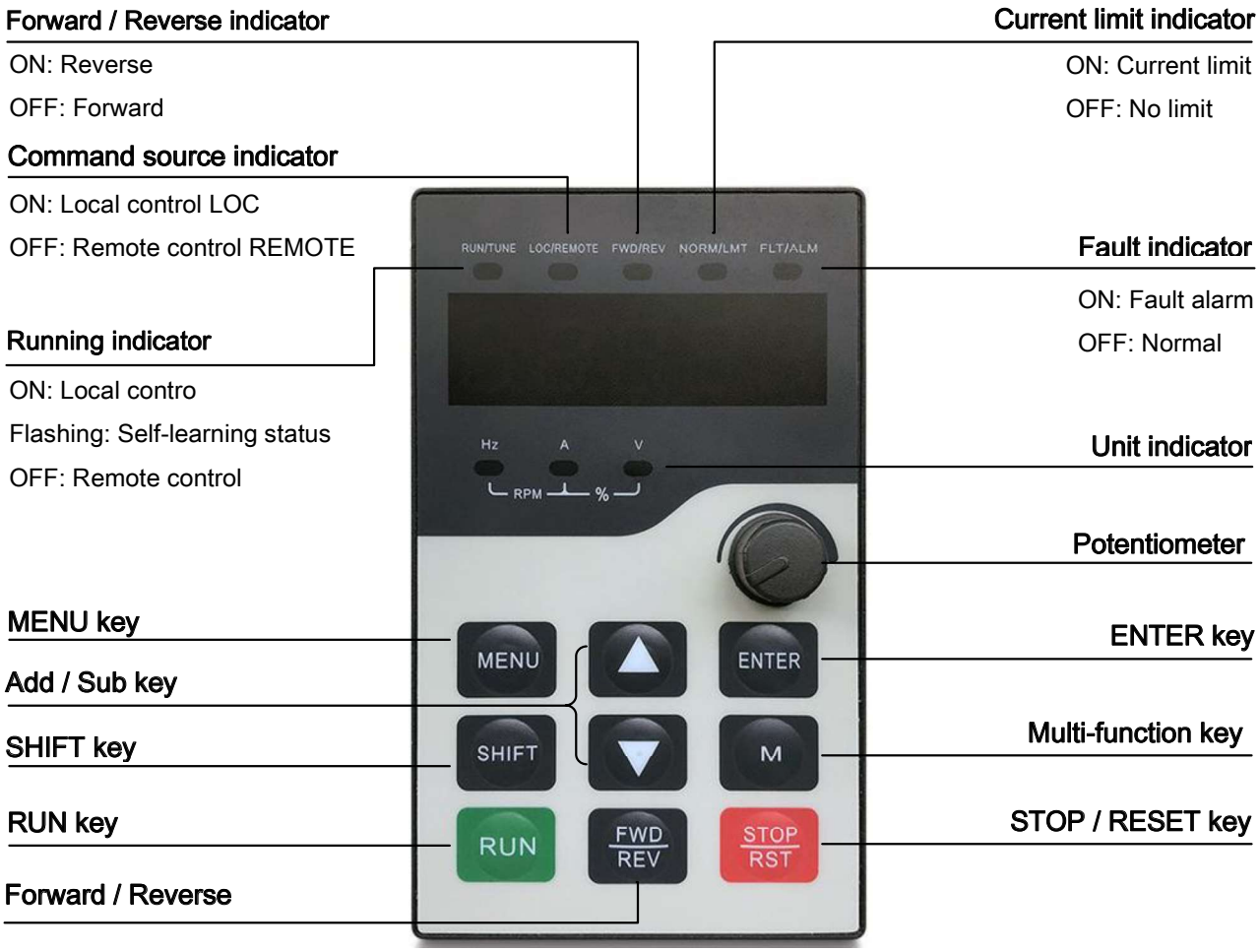

Function indicator:

- RUN/TUNE: When the light is on, it indicates that the inverter is in running state. When the light is flashing, it indicates that the inverter is in the self-learning state. When the light is off, the inverter is in the stop state.
- LOC/REMOTE: Panel operation, terminal operation and communication control indicator.

○ LOCAL/REMOT : Light off	Run/Stop in panel control
● LOCAL/REMOT : Light on	Run/Stop in terminal control
◑ LOCAL/REMOT : Light blink	Run/Stop in communication control

- FWD/REV: Light is on, VFD runs forward; Light is off, VFD runs reversely.
- NORM/LMT：Light is on, VFD is in current limit state; Light is off, VFD is not in current limit state and can run normally.
- FLT/ALM：Fault alarm indicator：

○ LOCAL/REMOT：Light off	VFD in normal running status
● LOCAL/REMOT：Light on	VFD in fault status & display fault code
◑ LOCAL/REMOT：Light blink	VFD in alarm status & do not display fault code

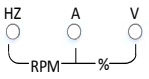

：Unit indicator, used to show unit of current data.

There are some unit below：（○ Light OFF；● Light ON）

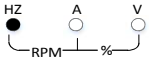

：HZ Frequency unit

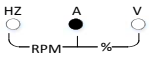

：A Current unit

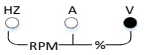

：V Voltage unit

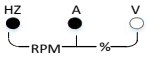

：RPM Speed unit

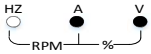

：% Percentage

There are 8 keys on the operation panel and functions of each key are shown in Table 4-1.

Table 4-1 Function list of operation panel

Key	Name	Function
MENU	Program/exit key	Enter or exit programming status
ENTER	Function/data key	Enter next level menu or confirm data
∧	Increase key	Increase data or parameter
∨	Decrease key	Decrease data or parameter
SHIFT	Shift key	In editing status, press this key to select the Bit to be modified. In other status, this key is used to switch the parameters to display.
M	Multi-function key	Use the b4.01 to configure the function of this key
RUN	Run key	In panel control mode, press this key to run the drive.
STOP/RST	Stop/reset key	Press this key to stop or reset the drive.

4.1.2 Display status of operation panel

FV20 operation panel can display the parameters in stopping, operating, editing and function code..

1. Parameters displayed in stopping status

When the drive is in stop status, the operation panel displays the stop status parameter. Pressing the SHIFT key can display different stop status parameters in cycle (Defined by function code b4.05)

2. Parameters displayed in operation status

When the drive receives operating command, it starts running and its panel will display the operation status parameters, the RUN indicator turns on. The status of FWD indicator depends on the operation direction. The unit indicator display the unit of the parameter, by pressing the SHIFT key can display different operation parameters in cycle (Defined by function code b4.05)

3. Parameters displayed in error status

When the drive detects a fault signal, the panel will display the flashing fault code..

Press the SHIFT key to display the stop status parameters and error code in cycle. By pressing the STOP/RST, control terminal or communication command to reset the error. If the error exists still, then the panel keeps displaying the error code.

4. Parameter edit status

When the drive is in stop, operation or error state, press MENU/ESC can enter edit status(If password needed, please refer to description of A0.00),. Edit state displays in 2-level menu, they arefunction code group or function code number→function code parameter value. You can press ENTER to enter parameter displayed status. In function parameter displayed status, press ENTER to save the settings, and press MENU to exit the menu.

4.1.3 Panel Operation

Various operations can be completed on the operation panel; the following are 5 common examples. Refer to function code list in chapter 9 for detail function code description.

Example 1.Set parameters

Example.Change the value in A0.03 from 50.00Hz to 30Hz

1. In the stop parameter displaying state, press MENU to enter the first level A0.00;
2. Press ∧ to change A0.00 to A0.03;
3. Press ENTER to enter the second level menu
4. Press the SHIFT to change the marker to the highest bit
5. Press the ∨ to change the 50.00 to 30.00
6. Press the ENTER to confirm above change and back to the fist level menu. Then the parameter is changed successfully.

The above operations are shown in following picture.

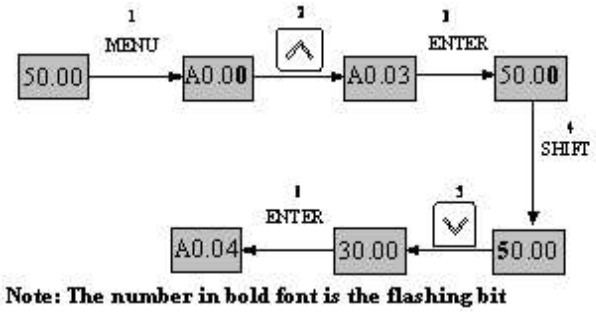

Fig 4-2 Example of setting parameter

In function parameter displaying status, if there is no bit flashing. It means that this function code can not be changed, the possible reason are.

1. This function code is unchangeable parameter. Like actual detected parameter, operation log parameter and so on
2. This parameter can not be changed when running; you need stop the VFD to edit the parameter
3. The parameters are protected. When the b4.02 is 1, function code can not be changed. It is to protect the VFD from wrong operation. If you want to edit this parameter, you need set function code b4.02 to 0.

Chapter 5 Troubleshooting

Table 5-1 lists the possible faults of FV20, error code E001 ~ E099. When VFD reports error, users could check this list and record the detailed fault phenomena before seeking service from supplier.

Table 5-1 Faults

Error code	Error category
E001	Hardware over current during acceleration
E002	Hardware over current during deceleration.
E003	Hardware over current during running in constant speed.
E004	Hardware over voltage during acceleration.
E005	Hardware over voltage during deceleration.
E006	Hardware over voltage during running in constant speed.
E007	Software detected over-voltage
E008	Input phase loss
E009	Output phase loss
E010	22kw above models.IGBT module is detected voltage drop too large.
E011	IGBT module's heatsink overheat.
E012	Rectifer's heatsink overheat.
E013	Running current is larger than VFD rated current for long time.
E014	Running current is larger than motor rated current for long time.
E015	External device fault.
E016	EEPROM W/R fault.
E017	VFD can not get communication with host.
E018	Power board/drive board/contactor damage causes contactor abnormal.
E019	Hall/drive board abnormal causes current detective circuit fault.
E020 ~ E022	Reserved
E023	Keyboard parameter copy error
E024	Auto tunning fault in vector control.
E025	Encoder signal fault in lose-loop control
E026	VFD running current is detected smaller than set value of load lost.
E027	Braking unit fault.
E028 ~ E030	Reserved
E031	Current limiting fault
E032	Reserved
E033	VFD output is short circuit to earth
E034	VFD running speed and encoder detected speed deviation exceeds allowed value.
E035 ~ E039	Reserved
E040	Extension card and control board SPI communication fault
E041	Software detected over-current during acceleration
E042	Software detected over-current during deceleration
E043	Software detected over-current at constant speed
E091 ~ E092	Internal data processing is abnormalseek help from manufacturer (MCU communication failed,replace the control board)

Note:
VFD braking resistor short circuit may lead to VFD braking unit damage.

Chapter 6 List of Parameters

FV20 series VFD's parameters are organized in groups. Each group has several parameters that are identified by "Group No.+ Function Code. There are AX,YZ letters in other content in this manual,it indicate the YZ function code in group X.For example,"A6.08" belongs to group A6 and its function code is 8.

The parameter descriptions are listed in the tables below.

Table 6-1 Descriptions of Function Code Parameter Structure Table

No.	Name	Description
1	Function code	The number of function code
2	Name	The name of function code
3	Setting range	The setting range of parameters.
4	Unit	The minimum unit of the setting value of parameters.
5	Factory setting	The setting value of parameters after the product is delivered
6	Modification	The "modification" column in the parameter table means whether the parameter can be modified. " O " : Denotes the parameters can be modified during operation or at STOP state; " × " : Denotes the parameters cannot be modified during operating; " * " : Denotes the parameters are actually detected and cannot be revised; " - " : Denotes the parameters are defaulted by factory and cannot be modified ; (When you try to modify some parameters, the system will check their modification property automatically to avoid mis-modification.)

Note:
1 . Parameter settings are expressed in decimal (DEC) and hexadecimal (HEX). If the parameter is expressed in hexadecimal, the bits are independent to each other.The value of the bits can be 0 ~ F.
2 . "Factory settings" means the default value of the parameter. When the parameters are initialized, they will resume to the factory settings. But the actual detected or recorded parameters cannot be initialized;

⚠ Note	It is defaulted that no parameters except A0.03 are allowed changing. If you need change them,please first set b4.02(parameter write-in protection) from 1 to 0.

Table 6-2 List of Parameters

Function code	Name	Descriptions	Unit	Factory setting	Modif.	Setting range
Group A0.Basic operating parameters						
A0.00	User password	0: No password protection. Others: Password protection.	1	0	O	0 ~ FFFF
A0.01	Control mode	LED Unit's place: Motor 1 control mode 0: Vector c ontrol without PG 1: Vector control with PG 2: V/F control without PG 3: V/F control with PG	1	2	X	0 ~ 2

Function code	Name	Descriptions	Unit	Factory setting	Modif.	Setting range
		LED Ten's place: Motor 1 type 0: asynchronous motor 1: synchronous motor LED Hundred's place: Motor 2 control mode 0: Vector control without PG 1: Vector control with PG 2: V/F control without PG 3: V/F control with PG LED Thousand's place: Motor 2 type 0: asynchronous motor 1: synchronous motor				
A0.02	Main reference frequency selector	0: Digital setting Keyboard UP/DN or terminal UP/DN 1: AI1 2: AI2 3: Keyboard potentiometer 4: Set via DI terminal(PULSE) 5: Reserved	1	0	O	0 ~ 5
A0.03	Set the operating frequency indigital mode	A0.11 ~ A0.10	0.01Hz	50.00	O	0 ~ 30000
A0.04	Methods of inputting operating commands	0: Panel control 1: Terminal control 2: Communication control	1	1	O	0 ~ 2
A0.05	Set running direction	0: Forward 1: Reverse	1	0	O	0 ~ 1
A0.06	Acc time 1	0.0 ~ 6000.0	0.1s	2kw or below : 6.0s 30kw ~ 45kw : 20.0s 45kw or above : 30.0s	O	0 ~ 60000
A0.07	Dec time 1	0.0 ~ 6000.0	0.1s	2kw or below : 6.0s 30kw ~ 45kw : 20.0s 45kw or above : 30.0s	O	0 ~ 60000
A0.08	Max. output frequency	upper limit of frequency A0.11 ~ 300.00Hz	0.01Hz	50.00	X	0 ~ 30000
A0.09	Max. output Voltage	0 ~ 480V	1V	VFD's rated values	X	0 ~ 60000
A0.10	Upper limit offrequency	A0.11 ~ A0.08	0.01Hz	50.00	O	0 ~ 30000
A0.11	Lower limit offrequency	0.00 ~ A0.10	0.01Hz	0.00	O	0 ~ 30000
A0.12	Basic frequency	0.00 ~ 300.00Hz	0.01Hz	50.00	O	0 ~ 30000
A0.13	Torque boost	0.0%(Auto) , 0.1% ~ 30.0%	0.1%	0.0%	O	0 ~ 300

Function code	Name	Descriptions	Unit	Factory setting	Modif.	Setting range
Group A1.Start and stop parameters						
A1.00	Starting mode	0: Start from the starting frequency 1: Brake first and then start 2: Start on the fly(including direction judgement), start at starting frequency 3: Current search type speed tracking starting (only valid in V/F control)	1	0	X	0 ~ 2
A1.01	Starting frequency	0.00 ~ 60.00Hz	0.01Hz	0.00Hz	O	0 ~ 6000
A1.02	Holding time of starting frequency	0.00 ~ 10.00s	0.01s	0.00s	O	0 ~ 1000
A1.03	DC injection braking current at start	0.0% ~ 100.0% drive's rated current	0.1%	0.0%	O	0 ~ 1000
A1.04	DC injection braking time at start	0.00(No action) 0.01 ~ 30.00s	0.01s	0.00s	O	0 ~ 3000
A1.05	Stopping mode	0: Dec-to-stop 1: Coast-to-stop 2: Dec-to-stop+DC injection braking	1	0	X	0 ~ 2
A1.06	DC injection braking initial frequency at stop	0.00 ~ 60.00Hz	0.01Hz	0.00Hz	O	0 ~ 6000
A1.07	Injection braking waiting time at stop	0.00 ~ 10.00s	0.01s	0.00s	O	0 ~ 1000
A1.08	DC injection braking current at stop	0.0% ~ 100.0% drive's rated current	0.1%	0.0%	O	0 ~ 1000
A1.09	DC injection braking time at stop	0.0(No action) 0.01 ~ 30.00s	0.01s	0.00s	O	0 ~ 3000
A1.10	Restart after power failure	0: Disable 1: Enable	1	0	X	0 ~ 1
A1.11	Delay time for restart after power	0.0 ~ 10.0s	0.1s	0.0s	O	0 ~ 100
A1.12	Anti-reverse running function	0: Disabled 1: Enabled (It will operate at zero frequency when input a reverse command)	1	0	X	0 ~ 1
A1.13	Delay time of run reverse/forward	0.00 ~ 360.00s	0.01s	0.00s	O	0 ~ 36000
A1.14	Switch mode of run reverse / forward(Reserved)	0: Switch when pass 0Hz 1: Switch when pass starting frequency	1	0	X	0 ~ 1
A1.15	Stopping speed	0.00 ~ 150.00Hz	0.01Hz	0.10Hz	X	0 ~ 15000
A1.16	Action voltage of braking unit	650 ~ 750V	1	720	X	650 ~ 750
A1.17	Dynamic braking	0: Disable 1: Enable	1	0	X	0 ~ 1
A1.18	Ratio of working time of braking unit to drive's total working time	0.0 ~ 100.0%	0.1%	80.0%	O	0 ~ 1000

Function code	Name	Descriptions	Unit	Factory setting	Modif.	Setting range
A1.19	Selection of power outage restarting mode	0: Current finding mode (Only valid in V/F control; Otherwise set to 0, starting with vector tracking) 1: Vector tracking mode 2: Depend on the parameter A1.00	1	0	X	0 ~ 2
Group A2.Frequency setting						
A2.00	Auxiliary reference frequency selector	0: No auxiliary reference frequency 1: AI1 2: AI2 3: Keyboard potentiometer 4: Set by DI (PULSE)terminal 5: output by PID process	1	0	O	0 ~ 5
A2.01	Main and auxiliary reference frequency calculation	0: + 1: - 2: MAX (Main reference, Auxiliary reference) 3: MIN (Main reference, Auxiliary reference)	1	0	O	0 ~ 3
A2.02	UP/DN rate	0.01 ~ 99.99Hz/s	0.01	1.00	O	1 ~ 9999
A2.03	UP/DN regulating control	Unit's place of LED: 0: Save reference frequency upon power outage 1: Not save reference frequency upon power outage. Ten's place of LED: 0: Hold reference frequency at stop 1: Clear reference frequency at stop Hundred's place of LED: 0: UP/DN integral time valid 1: UP/DN speed value	1	000	O	0 ~ 111H
A2.04	Jog operatingfrequency	0.10 ~ 50.00Hz	0.01Hz	5.00	O	10 ~ 5000
A2.05	Interval of Jog operation	0.0 ~ 100.0s	0.1s	0.0	O	0 ~ 1000
A2.06	Skip frequency 1	0.00 ~ 300.00Hz	0.01Hz	0.00	X	0 ~ 30000
A2.07	Range of skip frequency1	0.00 ~ 30.00Hz	0.01Hz	0.00	X	0 ~ 3000
A2.08	Skip frequency 2	0.00 ~ 300.00Hz	0.01Hz	0.00	X	0 ~ 30000
A2.09	Range of skip frequency	0.00 ~ 30.00Hz	0.01Hz	0.00	X	0 ~ 3000
A2.10	Skip frequency 3	0.00 ~ 300.00Hz	0.01Hz	0.00	X	0 ~ 30000
A2.11	Range of skip frequency3	0.00 ~ 30.00Hz	0.01Hz	0.00	X	0 ~ 3000
Group A3.Setting curve						
A3.00	Reference frequency curve selection	LED unit's place.AI1 curve selection 0: Curve 1 1: Curve 2 2: Curve 3 3: Curve 4	1	0000	O	0 ~ 3333H

Function code	Name	Descriptions	Unit	Factory setting	Modif.	Setting range
		LED ten's place.AI2 curve selection 0: Curve 1 1: Curve 2 2: Curve 3 3: Curve 4 LED hundred's place.Keyboard potentiometer curve selection 0: Curve 1 1: Curve 2 2: Curve 3 3: Curve 4 LED thousand's place. Pulse input curve selection 0: Curve 1 1: Curve 2 2: Curve 3 3: Curve 4				
A3.01	Max reference of curve 1	A3.03 ~ 110.00%	0.01%	100.00%	O	0 ~ 11000
A3.02	Actual value corresponding to the Max reference of curve 1	Reference frequency: 0.0 ~ 100.00%Fmax Torque.0.0 ~ 300.00%Te	0.01%	100.00%	O	0 ~ 10000
A3.03	Min reference of curve 1	0.0% ~ A3.01	0.01%	0.00%	O	0 ~ 11000
A3.04	Actual value corresponding to the Min reference of curve 1	The same as A3.02	0.01%	0.00%	O	0 ~ 10000
A3.05	Max reference of curve 2	A3.07 ~ 110.00%	0.01%	100.00%	O	0 ~ 11000
A3.06	Actual value corresponding to the Max reference of curve 2	The same as A3.02	0.01%	100.00%	O	0 ~ 10000
A3.07	Min reference of curve 2	0.0% ~ A3.05	0.01%	0.00%	O	0 ~ 11000
A3.08	Actual value corresponding to the Min reference of curve 2	The same as A3.02	0.01%	0.00%	O	0 ~ 10000
A3.09	Max reference of curve 3	A3.11 ~ 110.00%	0.01%	100.00%	O	0 ~ 11000
A3.10	Actual value corresponding to the Max reference of curve 3	The same as A3.02	0.01%	100.00%	O	0 ~ 10000
A3.11	Min reference of curve 3	0.0% ~ A3.09	0.01%	0.00%	O	0 ~ 11000
A3.12	Actual value corresponding to the Min reference of curve 3	The same as A3.02	0.01%	0.00%	O	0 ~ 10000
A3.13	Max reference of curve 4	A3.15 ~ 110.00%	0.01%	100.00%	O	0 ~ 11000
A3.14	Actual value corresponding to the Max reference of curve 4	The same as A3.02	0.01%	100.00%	O	0 ~ 10000

Function code	Name	Descriptions	Unit	Factory setting	Modif.	Setting range
A3.15	Reference of inflection point 2 of curve 4	A3.17 ~ A3.13	0.01%	100.00%	O	0 ~ 11000
A3.16	Actual value corresponding to the Min reference of inflection point 2 of curve 4	The same as A3.02	0.01%	100.00%	O	0 ~ 10000
A3.17	Reference of Inflection point 1 of curve 4	A3.19 ~ A3.15	0.01%	0.00%	O	0 ~ 11000
A3.18	Actual value corresponding to the Min reference of inflection point 1 of curve 4	The same as A3.02	0.01%	0.00%	O	0 ~ 10000
A3.19	Min reference of curve 4	0.0% ~ A3.17	0.01%	0.00%	O	0 ~ 11000
A3.20	Actual value Corresponding to the Min reference of curve 4	The same as A3.02	0.01%	0.00%	O	0 ~ 10000
A3.21	Characteristic selection of curve	LED unit's place: Characteristic choice of curve 1 0: set 0 Hz when frequency < 0 Hz 1: symmetrical about origin 2: absolute value LED unit's place: Characteristic choice of curve 2 0: set 0 Hz when frequency < 0 Hz 1: symmetrical about origin 2: absolute value LED hundred's place: Characteristic choice of curve 3 0: set 0 Hz when frequency < 0 Hz 1: symmetrical about origin 2: absolute value LED thousand's place: Characteristic choice of curve 4 0: set 0 Hz when frequency < 0 Hz 1: symmetrical about origin 2: absolute value	1	0000	O	0000 ~ 2222H 【0000】
Group A4.Acc/Dec parameters						
A4.00	Acc/Dec mode	0: Linear Acc/Dec 1: S curve	1	0	X	0 ~ 1
A4.01	Acc time 2	0.0 ~ 6000.0	0.1s	20.0s	O	0 ~ 60000
A4.02	Dec time 2	0.0 ~ 6000.0	0.1s	20.0s	O	0 ~ 60000
A4.03	Acc time 3	0.0 ~ 6000.0	0.1s	20.0s	O	0 ~ 60000
A4.04	Dec time 3	0.0 ~ 6000.0	0.1s	20.0s	O	0 ~ 60000
A4.05	Acc time 4	0.0 ~ 6000.0	0.1s	20.0s	O	0 ~ 60000
A4.06	Dec time 4	0.0 ~ 6000.0	0.1s	20.0s	O	0 ~ 60000

Function code	Name	Descriptions	Unit	Factory setting	Modif.	Setting range
A4.07	S curve acceleration starting time	10.0% ~ 50.0%(Acc time) A4.07+ A4.08≤90%	0.1%	20.0%	O	100 ~ 500
A4.08	S curve acceleration ending time	10.0% ~ 80.0%(Acc time) A4.07+ A4.08≤90%	0.1%	20.0%	O	100 ~ 800
A4.09	S curve deceleration starting time	10.0% ~ 50.0%(Dec time) A4.09+ A4.10≤90%	0.1%	20.0%	O	100 ~ 500
A4.10	Scurve deceleration ending time	10.0% ~ 70.0%(Dec time) A4.09+ A4.10≤90%	0.1%	20.0%	O	100 ~ 700
A4.11 ~ A4.21	Reserved	-	1	0	O	0 ~ 65535
A4.22	A4.22Switch frequency for Acc/Dec time 1 and Acc/Dec time 2.	0.00 ~ 300.00Hz 【000.00】 Acc/Dec time 2 is selected when output frequency is less than A4.22	0.01Hz	0.00Hz	X	0 ~ 30000
A4.23 ~ A4.25	Reserved	-	1	0	O	0 ~ 65535
Group A5.Control parameters						
A5.00	Speed/torque control mode	0: Speed control mode 1: Torque control mode	1	0	X	0 ~ 1
A5.01	ASR1-P	0.1 ~ 200.0	0.1	2.0	O	1 ~ 2000
A5.02	ASR1-I	0.000 ~ 10.000s	0.001s	0.100s	O	0 ~ 10000
A5.03	Switch frequency 1	0.0% ~ A5.06	0.1%	10.0%	O	1 ~ 1000
A5.04	ASR2-P	0.1 ~ 200.0	0.1	20.0	O	1 ~ 2000
A5.05	ASR2-I	0.000 ~ 10.000s	0.001s	0.200s	O	0 ~ 10000
A5.06	Switch frequency 2	A5.03 ~ 100%	0.1%	20.0%	O	1 ~ 1000
A5.07	Reserved	Reserved	1	-	O	0 ~ 65535
A5.08	Maximum speed limit for forward running when torque control	0.0% ~ +100.0%	0.1%	100.0%	O	0 ~ 1000
A5.09	Maximum speed limit for reverse running when torque control	0.0% ~ +100.0%	0.1%	100.0%	O	0 ~ 1000
A5.10	Driving torque limit	0.0% ~ +300.0%	0.1%	180.0%	O	0 ~ 3000
A5.11	Braking torque limit	0.0% ~ +300.0%	0.1%	180.0%	O	0 ~ 3000
A5.12	Reference torque selection	0: Digital setting 1: AI1 2: AI2 3: Keyboard potentiometer 4: Pulse DI terminal setting	1	0	X	0 ~ 4
A5.13	Digital reference torque	-300.0% ~ +300.0%	0.1%	0.0%	O	0 ~ 6000
A5.14	Speed→Torque switching point	0% ~ +300.0% Initial torque	0.1%	100.0%	X	0 ~ 3000
A5.15	Speed/torque switching delay time	0 ~ 1000ms	1	0	X	0 ~ 1000

Function code	Name	Descriptions	Unit	Factory setting	Modif.	Setting range
A5.16	Reference torque filtering time	0 ~ 65535ms	1ms	0	X	0 ~ 65535
A5.17	Excitation current proportional gain	0.00 ~ 200.0	0.01%	1000	O	0 ~ 20000
A5.18	Excitation current integral gain	0.000 ~ 20.000s	0.001s	300	O	0 ~ 20000
A5.19	Torque current proportional gain	0.00 ~ 200.0	0.01%	1000	O	0 ~ 20000
A5.20	Torque current integral gain	0.000 ~ 20.000s	0.001s	300	O	0 ~ 20000
Group A6.Control terminals parameters						
A6.00	Input terminal X1 function selection	0: No function 1: Forward 2: Reverse 3: Forward jog operation 4: Reverse jog operation 5: 3-wire operation control 6: External RESET signal input 7: External fault signal input 8: External interrupt signal input 9: Drive operation prohibit 10: External stop command 11: DC injection braking command 12: Coast to stop 13: Frequency ramp up (UP) 14: Frequency ramp down (DN) 15: Switch to panel control 16: Switch to terminal control 17: Switch to communication control mode 18: Main reference frequency via AI1 19: Main reference frequency via AI2 20: Main reference frequency via Keyboard potentiometer 21: Main reference frequency via DI 22: Auxiliary reference frequency invalid 23: Auxiliary reference frequency via AI1 (Reserved) 24: Auxiliary reference frequency via AI2 (Reserved) 25: Auxiliary reference frequency via Keyboard potentiometer (Reserved) 26: Auxiliary reference frequency via DI (Reserved) 27: Preset frequency 1	1	1	X	0 ~ 100

Function code	Name	Descriptions	Unit	Factory setting	Modif.	Setting range
		28: Preset frequency 2 29: Preset frequency 3 30: Preset frequency 4 31: Acc/Dec time 1 32: Acc/Dec time 2 33: Multiple close-loop reference selection 1 34: Multiple close-loop reference selection 2 35: Multiple close-loop reference selection 3 36: Multiple close-loop reference selection 4 37: Forward prohibit 38: Reverse prohibit 39: Acc/Dec prohibit 40: Process close-loop prohibit 41: Speed and torque control switching terminal 42: Main frequency switch to digital setting 43: PLC pause 44: PLC prohibit 45: PLC stop memory clear 46: Swing input 47: Swing reset 48 ~ 49: Reserved 50: Motor 1 and motor 2 switch terminals 51: Timer 1 start 52: Timer 2 start 53: Counter start 54: Counter clear Other: Reserved				
A6.01	Input terminal X2 function selection	The same as A6.00	1	2	X	0 ~ 100
A6.02	Input terminal X3 function selection	The same as A6.00	1	6	X	0 ~ 100
A6.03	Input terminal X4 function selection	The same as A6.00	1	27	X	0 ~ 100
A6.04	Input terminal X5 function selection	The same as A6.00	1	28	X	0 ~ 100
A6.05	Input terminal X6 function selection	The same as A6.00	1	29	X	0 ~ 100
A6.06	Reserved	-	1	0	O	0 ~ 65535

Function code	Name	Descriptions	Unit	Factory setting	Modif.	Setting range
A6.07	Reserved	-	1	0	O	0 ~ 65535
A6.08	Terminal filter	0 ~ 500ms	1	10	O	0 ~ 500
A6.09	Terminal control mode selection	0: 2-wire operating mode 1 1: 2-wire operating mode 2 2: 3-wire operating mode 1 3: 3-wire operation mode 2 4: 2-wires operation mode 3	1	0	X	0 ~ 3
A6.10	Max. frequency of input pulse	0.1 ~ 100.0(Max.100k), Only valid when X6 is defined as pulse input.	0.1kHz	10.0	O	1 ~ 1000
A6.11	Center point of pulse setting selection	0: No center point 1: Center point mode 1,the center point is(A6.10)/2.It is positive when frequency less than center point. 2: Center point mode 2.The center point is (A6.10)/2.It is negative when frequency less then center point.	1	0	O	0 ~ 1
A6.12	Filter of pulse input	0.00 ~ 10.00s	0.01s	0.05	O	0 ~ 1000
A6.13	Input terminal's positive and negative logic	Binary setting 0: Positive logic.Terminal Xi is enabled if it is connected to corresponding common terminal, and disabled if it is disconnected. 1: Negative logic.Terminal Xi is disabled if it is connected to corresponding common terminaland enabled is it is disconnected. Unit's place of LED: BIT0 ~ BIT3.X1 ~ X4 Ten's place of LED: BIT0 ~ BIT1.X5 ~ X6	1	00	O	0 ~ FFH
A6.14	Bi-direction pen-collector output terminal Y1	0: Running signal(RUN) 1: Frequency arriving signal(FAR) 2: Frequency detection threshold (FDT1) 3: Frequency detection threshold (FDT2) 4: Overload detection signal(OL) 5: Low voltage signal(LU) 6: External fault stop signal(EXT) 7: Frequency high limit(FHL) 8: Frequency low limit(FLL) 9: Zero-speed running 10: Terminal X1(Reserved) 11: Terminal X2(Reserved) 12: PLC running step complete signal	1	0	X	0 ~ 20

Function code	Name	Descriptions	Unit	Factory setting	Modif.	Setting range
		13: PLC running cycle complete signal 14: Limit of swing frequency upper/lower limit 15: Drive ready (RDY) 16: Drive fault 17: Switching signal of host 18: Reserved 19: Torque limiting 20: Drive running forward/reverse 21: Timer 1 end 22: Timer 2 end 23: Setting counter reach 24: Middle counter reach 35: Motor 1 and motor 2 indicating terminals Other: Reserved				
A6.15	Reserved	-	1	0	O	0 ~ 65535
A6.16	Output functions of relay R1	The same as A6.14	1	16	X	0 ~ 50
A6.17	Reserved	-	1	0	O	0 ~ 65535
A6.18	Delay of relay R1	0.1 ~ 10.0s	0.1s	0.1	O	1 ~ 100
A6.19	Reserved	-	1	0	O	1 ~ 65355
A6.20	Output terminal's positive and negative logic	Binary setting: 0: Terminal is enabled if it is connected to Corresponding common terminal, and disabled if it is disconnected. 1: Terminal is disabled if it is connected tocorresponding common terminal, and enabled is it is disconnected. Unit's place of LED: BIT0 ~ BIT1.Y1、R1 Ten's place of LED: BIT0.D0	1	0	O	0 ~ 1FH
A6.21	Frequency arriving signal (FAR)	0.00 ~ 300.00Hz	0.01Hz	2.50Hz	O	0 ~ 30000
A6.22	FDT1 level	0.00 ~ 300.00Hz	0.01Hz	50.00Hz	O	0 ~ 30000
A6.23	FDT1 lag	0.00 ~ 300.00Hz	0.01Hz	1.00Hz	O	0 ~ 30000
A6.24	FDT2 level	0.00 ~ 300.00Hz	0.01Hz	25.00Hz	O	0 ~ 30000
A6.25	FDT2 lag	0.00 ~ 300.00Hz	0.01Hz	1.00Hz	O	0 ~ 30000
A6.26	Virtual terminal setting	Binary setting 0: Disable 1: Enable	1	00	O	0 ~ FFH

Function code	Name	Descriptions	Unit	Factory setting	Modif.	Setting range
		Unit's place of LED: BIT0 ~ BIT3.X1 ~ X4 Ten's place of LED: BIT0 ~ BIT1.X5 ~ X6				
A6.27	Y1 terminal output	0 ~ 50: D0 is used as Y terminal output. 51 ~ 88: D0 function 0: Running signal(RUN) 1: frequency arriving signal(FAR) 2: frequency detection threshold (FDT1) 3: frequency detection threshold (FDT2) 4: overload signal(OL) 5: low voltage signal(LU) 6: external fault signal(EXT) 7: frequency high limit(FHL) 8: frequency low limit(FLL) 9: zero-speed running 10: Terminal X1(Reserved) 11: Terminal X2(Reserved) 12: PLC running step complete signal 13: PLC running cycle complete signal 14: Limit of swing frequency upper/lower limit 15: Drive ready (RDY) 16: Drive fault 17: Switching signal of host 18: Reserved 19: Torque limiting 20: Drive running forward/reverse 21 ~ 50: Reserved 51: Output frequency (0 ~ Max. output frequency) 52: Preset frequency (0 ~ Max. output frequency) 53: Preset frequency (After Acc/Dec)(0 ~ Max. output frequency) 54: Motor speed(0 ~ Max. speed) 55: Output current(0 ~ 2*Iei) 56: Output current(0 ~ 2*Iem) 57: Output torque(0 ~ 3*Tem) 58: Output power(0 ~ 2*Pe) 59: Output voltage(0 ~ 1.2*Ve) 60: Bus voltage(0 ~ 800V) 61: AI1 62: AI2	1	0	O	0 ~ 88

Function code	Name	Descriptions	Unit	Factory setting	Modif.	Setting range
		63: Keyboard potentiometer 64: DI 65: Percentage of host(0 ~ 4095) 66 ~ 88: Reserved				
A6.28	Max. output pulse frequency	0.1 ~ 100.0(Max.100.0k)	0.1kHz	10.0	O	1 ~ 1000
A6.29	Center point of pulse output selection	0: No center point 1: Center point mode 1, the center point is (A6.26)/2.It is positive when frequency less than center point. 2: Center point mode 2.The center point is (A6.26)/2.It is negative when frequency less then center point.	1	0	O	0 ~ 2
A6.30	Functions of terminal AO1	0: No function 1: Output frequency (0 ~ Max. output frequency) 2: Preset frequency (0 ~ Max. output frequency) 3: Preset frequency(After Acc/Dec)(0 ~ Max. output frequency) 4: Motor speed(0 ~ Max. speed) 5: Output current(0 ~ 2*Iei) 6: Output current(0 ~ 2*Iem) 7: Output torque(0 ~ 3*Tem) 8: Output power(0 ~ 2*Pe) 9: Output voltage(0 ~ 1.2*Ve) 10: Bus voltage(0 ~ 800V) 11: AI1 12: AI2 13: Keyboard potentiometer 14: DI 15: Percentage of host(0 ~ 4095) 16 ~ 36: Reserved	1	0	O	0 ~ 36
A6.31	Functions of terminal A02	Same as above.	1	0	O	0 ~ 36
A6.32	Gain of A01	0.0% ~ 200.0%	0.1%	100.0%	O	0 ~ 2000
A6.33	Zero offset calibration of A01	-100.0% ~ 100.0%	0.1%	0.0	O	0 ~ 2000
A6.34	Gain of A02	0.0% ~ 200.0%	0.1%	100.0%	O	0 ~ 2000
A6.35	Zero offset calibration of A02	-100.0% ~ 100.0%	0.1%	0.0	O	0 ~ 2000
A6.36	AI1 filter	0.01 ~ 10.00s	0.01s	0.05	O	1 ~ 1000
A6.37	AI2 filter	0.01 ~ 10.00s	0.01s	0.05	O	1 ~ 1000
A6.38	Keyboard potentiometer filter	0.01 ~ 10.00s	0.01s	0.05	O	1 ~ 1000
A6.39	AI Analog offset calibration	0 ~ 1	1	0	O	0 ~ 1

Function code	Name	Descriptions	Unit	Factory setting	Modif.	Setting range
A6.40	AI1 gain	0.00% ~ 200%	0.01%	100%	O	1 ~ 20000
A6.41	AI2 gain	0.00% ~ 200%	0.01%	100%	O	1 ~ 20000
A6.42	Keyboard potentiometer gain	0.00% ~ 200%	0.01%	100%	O	1 ~ 20000
A6.43 ~ A6.45	Reserved	-	1	0	O	0 ~ 65535
A6.46	Timer 1 setting value	0.00 ~ 10.0s	0.1s	0.0	O	0 ~ 100
A6.47	Timer 2 setting value	0 ~ 100s	1s	0	O	0 ~ 100
A6.48	Counter target value	0 ~ 65535	1	100	O	0 ~ 65535
A6.49	Counter middle value	0 ~ 65535	1	50	O	0 ~ 65535
A6.50	Multi speed terminal switching time	0 ~ 500	1	0	O	0 ~ 65535
A6.51 ~ A6.60	Reserved		1	0	O	0 ~ 65535
Group A7.PG Parameters						
A7.00	PG type	0: ABZ incremental type 1: UVW incremental type 2: Cosine type 3: Reserved.	1	0	O	0 ~ 3
A7.01	Number of pulses per revolution of PG	1 ~ 10000	1	2048	O	1 ~ 10000
A7.02	Direction of PG	0: A phase lead B phase 1: B phase lead A phase	1	0	X	0 ~ 1
A7.03	Encoder signal filter number	Unit's place of LED: 0 ~ 9 high-speed filter Ten's place of LED: 0 ~ 9 low-speed filter	1	30H	O	0 ~ 99H
A7.04	PG disconnection detecting time	0.0: Disable 0.1 ~ 10.0	0.1s	0.0	O	0 ~ 100
A7.05	Reduction rate of motor and encoder	0.001 ~ 65.535	0.001	1	O	0 ~ 65535
Group A8.Fault parameters						
A8.00	Protective action of relay	Unit's place of LED: Action selection forunder-voltage fault indication. 0: Disable; 1: Enable Ten's place of LED: Action selection for auto reset interval fault indication. 0: Disable 1: Enable Hundred's place of LED: Selection for fault locked function. 0: Disable	1	0000	X	0 ~ 1111H

Function code	Name	Descriptions	Unit	Factory setting	Modif.	Setting range
		1: Enable Thousand's place of LED: Reserved				
A8.01	Fault masking selection 1	Unit's place of LED: Communication fault masking selection Ten's place of LED: Relay fault masking selection Hundred's place of LED: EEPROM fault masking selection Thousand's place of LED: Reserved 0: Disable.Stop when fault happen 1: Disable.Continue operating when fault happen 2: Enable	1	2000	X	0 ~ 2222H
A8.02	Fault masking selection 2	Unit's place of LED: Open phase fault masking selection for input Ten's place of LED: Open phase fault masking selection for output Hundred's place of LED: fault masking selection for over limit of deviation of speed Thousand's place of LED: fault masking selection for module's heatsink overheat 0: Disable.Stop when fault happen 1: Disable.Continue operating when fault happen 2: Enable	1	00	X	0 ~ 22H
A8.03	Motor overload protection mode selection	0: Disabled 1: Common mode (with low speed compensation) 2: Variable frequency motor (without low speed compensation)	1	1	X	0 ~ 2
A8.04	Auto reset times	0: Nofunction 1 ~ 100: Auto reset times Note: The IGBT protection (E010) and external equipment fault (E015) cannot be reset automatically.	1	0	X	0 ~ 100
A8.05	Reset interval	2.0 ~ 20.0s/time	0.1s	5.0s	X	20 ~ 200
A8.06	Fault lockingfunction selection.	0: Disable. 1: Enable.	1	0	X	0 ~ 1
Group b0.Motor 1 parameters						
b0.00	Asynchronous motor 1 rated power	0.2 ~ 999.9KW	0.1	0	X	2 ~ 9999
b0.01	Asynchronous motor 1 rated voltage	0 ~ Rated voltage	1	0	X	0 ~ 999

Function code	Name	Descriptions	Unit	Factory setting	Modif.	Setting range
b0.02	Asynchronous motor 1 rated current	0.1 ~ 999.9A	0.1A	Determined by model	X	1 ~ 9999
b0.03	Asynchronous motor 1 rated frequency	1.00 ~ 1000.00Hz	0.01Hz	Determined by model	X	100 ~ 30000
b0.04	Asynchronous motor 1 polarities number	2 ~ 24	1	4	X	2 ~ 24
b0.05	Asynchronous motor 1 rated speed	0 ~ 60000RPM	1RPM	1440RPM	X	0 ~ 60000
b0.06	Asynchronous motor 1 stator resistance %R1	0.00% ~ 50.00%	0.01%	Determined by model	X	0 ~ 5000
b0.07	Asynchronous motor 1 leakage inductance %X	0.00% ~ 50.00%	0.01%	Determined by model	X	0 ~ 5000
b0.08	Asynchronous motor 1 rotor resistance %R2	0.00% ~ 50.00%	0.01%	Determined by model	X	0 ~ 5000
b0.09	Asynchronous motor 1 mutual inductance %Xm	0.0% ~ 2000.0%	0.1%	Determined by model	X	0 ~ 20000
b0.10	Asynchronous motor 1 no-load current I0	0.1 ~ 999.9A	0.1A	Determined by model	X	1 ~ 9999
b0.11	Asynchronous motor 1 parameter auto-tuning	0: disable 1: Stationary auto-tuning (Start auto-tuning to a standstill motor) 2: Rotating auto-tuning 3: Reserved (calculated by nameplate setting)	1	0	X	0 ~ 3
b0.12	Asynchronous motor 1 overload protection coefficient	20.0% ~ 110.0%	0.1%	100.0%	X	200 ~ 1100
b0.13	Asynchronous motor 1 overload protection time	0.0 ~ 6000.0 0.0: Calculate the overload according to the internal overload curve	0.1s	0.0s	X	0 ~ 60000
b0.14	Asynchronous motor 1 oscillation inhibition coefficient	0 ~ 255	1	10	O	0 ~ 255
b0.15	Synchronous motor 1 rated power	0.4 ~ 999.9KW	0.1KW	Determined by model	X	4 ~ 9999
b0.16	Synchronous motor 1 rated voltage	0 ~ inverter rated voltage (F82.04) 2 series: 220V 4 series: 380V	1V	Determined by model	X	0 ~ 999
b0.17	Synchronous motor 1 rated current	0.1 ~ 999.9A	0.1A	Determined by model	X	1 ~ 9999
b0.18	Synchronous motor 1 rated frequency	1.00 ~ 1000.00Hz (Note: Pole number and rated frequency can be calculated from each other by only setting one of them.)	0.01Hz	Determined by model	X	100 ~ 100000

Function code	Name	Descriptions	Unit	Factory setting	Modif.	Setting range
b0.19	Synchronous motor 1pole number	1 ~ 40	1	2	X	1 ~ 40
b0.20	Synchronous motor 1 rated speed	0 ~ 60000RPM	1RPM	1500RPM	X	0 ~ 60000
b0.21	Synchronous motor 1 stator resistance	0.00% ~ 50.00%	0.01%	Determined by model	X	0 ~ 5000
b0.22	Synchronous motor 1 straight shaft inductance	0.0 ~ 999.9mH	0.1mH	Determined by model	X	0 ~ 9999
b0.23	Synchronous motor 1 quadrature axis inductance	0.0 ~ 999.9mH	0.1mH	Determined by model	X	0 ~ 9999
b0.24	Back potential constant of synchronous motor	1000V/1000RPM	1	150	X	0 ~ 1000
b0.25	Synchronous motor 1 position identification	Identification starts from 0 to 1 and automatically changes to 0 when the recognition ends.	1	0	X	0 ~ 1
b0.26	Synchronous motor 1 identification current	0 ~ 30% Rated current	1	10	X	0 ~ 30
b0.27	Synchronous motor 1 initial angle	0 ~ FFFFH	1	0	X	0 ~ FFFF
b0.28	Synchronous motor 1 Z phase pulse initial angle	0 ~ FFFFH	1	0	X	0 ~ FFFF
b0.29	Synchronous machine 1 overload protection coefficient	20.0% ~ 110.0% Set the action level (%) = motor rated current / inverter rated current × 100 Low speed compensation actual action level = set action level × (output frequency / 30HZ× 45 + 55) Overload protection actual conversion current = sampling current / overload protection action level	0.1%	100.0%	X	200 ~ 1100
Group b1.V/F parameters						
b1.00	V/F curve setting	0: V/F curve is defined by user 1: 2-order curve 2: 1.7-order curve 3: 1.2-order curve	1	0	X	0 ~ 3
b1.01	V/F frequency value F3	b1.03 ~ A0.08	0.01Hz	0.00Hz	X	0 ~ 30000
b1.02	V/F voltage value V3	b1.04 ~ 100.0%	0.1%	0.0%	X	0 ~ 1000
b1.03	V/F frequency value F2	b1.05 ~ b1.01	0.01Hz	0.00Hz	X	0 ~ 30000
b1.04	V/F voltage value V2	b1.06 ~ b1.02	0.1%	0.0%	X	0 ~ 1000
b1.05	V/F frequency value F1	0.00 ~ b1.03	0.01Hz	0.00Hz	X	0 ~ 30000
b1.06	V/F voltage value V1	0 ~ b1.04	0.1%	0.0%	X	0 ~ 1000
b1.07	Cut-off point used for manual torque boost	0.0% ~ 50.0% (Corresponding toA0.12)	0.1%	10.0%	O	0 ~ 500

Function code	Name	Descriptions	Unit	Factory setting	Modif.	Setting range
b1.08	AVR function	0: Disable 1: Enable all the time 2: Disabled in Dec process	1	2	X	0 ~ 2
b1.09	VF Output Voltage Selection	0: None 1: AI1 2: AI2 3: Keyboard potentiometer	1	0	X	0 ~ 3
b1.10	VF Output Voltage Offset Selection	0: None 1: AI1 2: AI2 3: Keyboard potentiometer	1	0	X	0 ~ 3
Group b2.Enhanced parameters						
b2.00	Carrier wave frequency	2.0 ~ 15.0KHz	0.1	8.0	O	20 ~ 150
b2.01	Auto adjusting of CWF	0: Disable 1: Enable	1	1	O	0 ~ 1
b2.02	Voltage adjustment selection	Unit's place of LED: Over-voltage at stall Selection 0: Disable (When install brake resistor) 1: Enable Ten's place of LED: Not stop when instantaneous stop function selection 0: Disable 1: Enable(Low voltage compensation) Hundred's place of LED: Over modulation selection 0: Disable 1: Enable	1	001	X	0 ~ 111H
b2.03	Over voltage point atstall	120.0% ~ 150.0%Udce	0.1%	140.0%	X	1200 ~ 1500
b2.04	Droop control	0.00 ~ 10.00Hz	0.00	0.00Hz	O	0 ~ 1000
b2.05	Auto current limiting threshold	20.0% ~ 200.0%Ie	0.1%	150.0%	X	200 ~ 2000
b2.06	Frequency decrease rate when current limiting	0.00 ~ 99.99Hz/s	0.01 Hz/s	1.00Hz/s	O	0 ~ 9999
b2.07	Auto current limiting selection	0: Invalid at constant speed 1: Valid at constant speed Note: It is valid all the time at Acc/Dec	1	1	X	0 ~ 1
b2.08	Gain of Slip compensation	0.0 ~ 300.0%	0.1%	100.0%	O	0 ~ 3000
b2.09	Slip compensation limit	0.0 ~ 250.0%	0.1%	200.0%	O	0 ~ 2500
b2.10	Slip compensation time constant	0.1 ~ 25.0s	0.1s	2.0s	O	0 ~ 250
b2.11	Auto energy-saving function	0: Disable 1: Enable	1	0	X	0 ~ 1

Function code	Name	Descriptions	Unit	Factory setting	Modif.	Setting range
b2.12	Frequency decrease rate at voltage compensation	0.00 ~ 99.99Hz/s	0.01 Hz/s	10.00 Hz/s	O	0 ~ 9999
b2.13	Zero-frequency Operation threshold	0.00 ~ 300.00Hz	0.01Hz	0.50Hz	O	0 ~ 30000
b2.14	Zero-frequency Hysteresis(Reserved)	0.00 ~ 300.00Hz	0.01Hz	0.00Hz	O	0 ~ 30000
b2.15	Fan control	0: Auto operation mode 1: Fan operate continuously when power is on 2: The start and stop of the fan is the same as the start and stop of the frequency converter Note: Keep running for 3 minutes after stop in mode 1.	1	0	X	0 ~ 2
Group b3.Communication parameter						
b3.00	Communication configuration	Unit's place of LED: Baud rate selection 0: 4800BPS 1: 9600BPS 2: 19200BPS 3: 38400BPS 4: 115200BPS 5: 125000BPS Ten's place of LED: Data format 0: 1-8-2-N format,RTU 1: 1-8-1-E format,RTU 2: 1-8-1-O format, RTU 3: 1-7-2-N format,ASCII 4: 1-7-1-E format,ASCII 5: 1-7-1-O format,ASCII Hundred's place of LED: wiring mode 0: Direct connection via cable (RS232/485) 1: MODEM (RS232) Thousand's place of LED: Storage mode for writing function 0: Save EEPROM 1: Save RAM	1	001	X	0 ~ 155H
b3.01	Local address	0 ~ 247, 0 is the broadcasting address	1	5	X	0 ~ 247
b3.02	Time threshold for judging the communication status	0.0 ~ 1000.0s	0.1	0.0s	X	0 ~ 10000
b3.03	Delayfore sponding to control PC	0 ~ 1000ms	1	5ms	X	0 ~ 1000
b3.06 ~ b3.17	Input parameter mapping 1 ~ 12	Input parameter mapping 1 ~ 12	1	0	O	0 ~ 1000

Function code	Name	Descriptions	Unit	Factory setting	Modif.	Setting range
b3.18 ~ b3.29	Input parameter mapping 1 ~ 12	Input parameter mapping 1 ~ 12	1	0	O	0 ~ 1000
Group b4.Keyboard parameters						
b4.00	Key-lock function selection	0: The keys on the operation panel are not locked, and all the keys are usable. 1: The keys on the operation panel are locked, and all the keys are unusable. 2: All the keys except for the multi-functional key are unusable. 3: All the keys except for the SHIFT key are unusable. 4: All the keys except for the RUN AND STOP keys are unusable.	1	0	O	0 ~ 4
b4.01	Multi-function key definition	0: Jog function 1: Coast-to-stop 2: Stop in shortest time 3: Switch of input method of operating command 4: Switch forward/reverse. (Save after power failure) 5: Switch forward/reverse. (Not save after power failure)	1	0	O	0 ~ 3
b4.02	Parameter protection	0: All parameters are allowed modifying; 1: Only A0.03 and b4.02 can be modified; 2: Only b4.02 can be modified.	1	1	O	0 ~ 2
b4.03	Parameter initialization	0: parameter adjustable 1: Clear fault information in memory 2: Restore to factory settings	1	0	X	0 ~ 2
b4.04	Parameter copy	0: No action 1: parameters upload 2: parameters download 3: parameters download (except the parameters relatedto drive type) Note: Not to upload/download drive's parameters.	1	0	X	0 ~ 3
b4.05	Display parameters selection	Binary setting0: No display 1: Display Unit's place of LED: BIT0: Output frequency (Not display when VFD stop,Display grid frequency input in energy feedback mode)	1	1007H	O	0 ~ FFFFH

Function code	Name	Descriptions	Unit	Factory setting	Modif.	Setting range
		BIT1: Setting frequency(Flick, Not display in energy feedback mode) BIT2: Output current (Not display when VFD stop, Display grid current input in energy feedback mode) BIT3: Output voltage (Not display when VFD stop, Display grid voltage input in energy feedback mode) Ten's place of LED: BIT0: AI1 BIT1: AI2 BIT2: Keyboard potentiometer BIT3: DI(Terminal status) Hundred's place of LED: BIT0: Output power (Not display when VFD stop, not display in energy feedback mode) BIT1: Output torque (Not display when VFD stop, not display in energy feedback mode) BIT2: Analog close-loop feedback (%) (Not display in energy feedback mode) BIT3: Analog close-loop setting (%) (Flick, Not display in energy feedback mode) Thousand's place of LED: BIT0: Bus voltage BIT1: Speed (R/MIN,Not display in energy feedback mode) BIT2: Setting speed (R/MIN,Flick, Not display in energy feedback mode) BIT3: Line speed Note: If all the BITs are 0,the drive will display setting frequency at stop, display output frequency at operating and display bus voltage at energy feedback mode				
b4.06	Operating frequency ratio	0.00 ~ 99.99	0.01	1.00	O	0 ~ 9999
b4.07	Operating speed ratio	0.000 ~ 30.000	0.001	1.000	O	0 ~ 30000
b4.08 ~ b4.10	Reserved	-	-	-	-	0 ~ 65535
b4.11	Menu model selection	0: shortcut menu 1: basic menu (reserved) 2: Advanced menu	1	2	X	0 ~ 4

Function code	Name	Descriptions	Unit	Factory setting	Modif.	Setting range
		3: User menu (reserved) 4: proofreading menu				
b4.12 ~ b4.15	Reserved	-	-	-	-	0 ~ 65535
b4.16	Standard / High frequency switching	0: Standard frequency 1: High frequency	1	0	X	0 ~ 1
b4.17	Fast current limit enable	0: closed 1: enable	1	0	X	0 ~ 1
b4.18	Motor selection	0: Motor 1 1: motor 2	1	0	X	0 ~ 1
b5 Motor 2 parameters						
b5.00	Asynchronous motor 2 rated power	0.2 ~ 999.9KW	0.1	0	X	2 ~ 9999
b5.01	Asynchronous motor 2 rated voltage	0 ~ Inverter Rated voltage	1	0	X	0 ~ 999
b5.02	Asynchronous motor 2 rated current	0.1 ~ 999.9A	0.1A	Determined by model	X	1 ~ 9999
b5.03	Asynchronous motor 2 rated frequency	1.00 ~ 1000.00Hz	0.01Hz	Determined by model	X	100 ~ 30000
b5.04	Asynchronous motor 2pole number	2 ~ 24	1	4	X	2 ~ 24
b5.05	Asynchronous motor 2 rated speed	0 ~ 60000RPM	1RPM	1440RPM	X	0 ~ 60000
b5.06	Asynchronous motor 2 stator resistance %R1	0.00% ~ 50.00%	0.01%	Determined by model	X	0 ~ 5000
b5.07	Asynchronous motor 2 leakage inductance %X	0.00% ~ 50.00%	0.01%	Determined by model	X	0 ~ 5000
b5.08	Asynchronous motor 2 rotor resistance %R2	0.00% ~ 50.00%	0.01%	Determined by model	X	0 ~ 5000
b5.09	Asynchronous motor 2 mutual inductance %Xm	0.0% ~ 2000.0%	0.1%	Determined by model	X	0 ~ 20000
b5.10	Asynchronous motor 2 no-load current I0	0.1 ~ 999.9A	0.1A	Determined by model	X	1 ~ 9999
b5.11	Asynchronous motor 2 parameter auto-tuning	0: disable 1: Stationary auto-tuning (Start auto-tuning to a standstill motor) 2: Rotating auto-tuning 3: Reserved (calculated by nameplate setting)	1	0	X	0 ~ 3
b5.12	Asynchronous motor 2 overload protection coefficient	20.0% ~ 110.0%	0.1%	100.0%	X	200 ~ 1100
b5.13	Asynchronous motor 2 overload protection time	0.0 ~ 6000.0; 0.0: Calculate the overload according to the internal overload curve	0.1s	0.0s	X	0 ~ 60000

Function code	Name	Descriptions	Unit	Factory setting	Modif.	Setting range
b5.14	Asynchronous motor 2 oscillation inhibition coefficient	0 ~ 255	1	10	O	0 ~ 255
b5.15	Synchronous motor 2 rated power	0.4 ~ 999.9KW	0.1KW	Determined by model	X	4 ~ 9999
b5.16	Synchronous motor 2 rated voltage	0 ~ inverter rated voltage (F82.04) 2 series: 220V 4 series: 380V	1V	Determined by model	X	0 ~ 999
b5.17	Synchronous motor 2 rated current	0.1 ~ 999.9A	0.1A	Determined by model	X	1 ~ 9999
b5.18	Synchronous motor 2 rated frequency	1.00 ~ 1000.00Hz (Remark: Pole number and rated frequency can be calculated from each other by only setting one of them.)	0.01Hz	Determined by model	X	100 ~ 100000
b5.19	Synchronous motor 2 pole-pair number	1 ~ 40	1	2	X	1 ~ 40
b5.20	Synchronous motor 2 rated speed	0 ~ 60000RPM	1RPM	1500RPM	X	0 ~ 60000
b5.21	Synchronous motor 2 stator resistance	0.00% ~ 50.00%	0.01%	Determined by model	X	0 ~ 5000
b5.22	Synchronous motor 2 straight shaft inductance	0.0 ~ 999.9mH	0.1mH	Determined by model	X	0 ~ 9999
b5.23	Synchronous motor 2 quadrature axis inductance	0.0 ~ 999.9mH	0.1mH	Determined by model	X	0 ~ 9999
b5.24	Back potential constant of synchronous motor	1000V/1000RPM	1	150	X	0 ~ 1000
b5.25	Synchronous motor 2 position identification	Identification starts from 0 to 1 and automatically changes to 0 when the recognition ends.	1	0	X	0 ~ 1
b5.26	Synchronous motor 2 identification current	0 ~ 30% Motor Rated current	1	10	X	0 ~ 30
b5.27	Synchronous motor 2 initial angle	0 ~ FFFFH	1	0	X	0 ~ FFFF
b5.28	Synchronous motor 2 Z phase pulse initial angle	0 ~ FFFFH	1	0	X	0 ~ FFFF
b5.29	Synchronous machine 2 over load protection coefficient	20.0% ~ 110.0% Set the action level (%) = motor rated current / inverter rated current × 100 Low speed compensation actual action level = set action level × (output frequency / 30HZ× 45 + 55) Overload protection actual conversion current = sampling current / overload protection action level	0.1%	100.0%	X	200 ~ 1100

Function code	Name	Descriptions	Unit	Factory setting	Modif.	Setting range
b5.30	Motor 2 PG type	0: ABZ incremental type 1: UVW incremental type 2: Rotary encoder type 3: sin/cos type	1	0	O	0 ~ 3
b5.31	Motor 2 Number of pulses per revolution of PG	1 ~ 10000	1	2048	O	1 ~ 10000
b5.32	Motor 2 Direction if PG	0: A phase lead B phase 1: B phase lead A phase	1	0	X	0 ~ 1
b5.33	Motor 2 Encoder signal filter number	Unit's place of LED： 0 ~ 9 high-speed filter Ten's place of LED: 0 ~ 9 low-speed filter	1	30H	O	0 ~ 99H
b5.34	Motor 2 PG disconnection detecting time	0.0：Disable 0.1 ~ 10.0	0.1s	0.0	O	0 ~ 100
b5.35	Motor 2 reduction rate of motor and encoder	0.001 ~ 65.535	0.001	1	O	0 ~ 65535
Group C0.Multi-section parameters						
C0.00	Preset frequency 1	A0.12(Lower limit of frequency) ~ A0.11(upper limit of frequency)	0.01Hz	5.00Hz	O	0 ~ 30000
C0.01	Preset frequency 2	Same as above	0.01Hz	10.00Hz	O	0 ~ 30000
C0.02	Preset frequency 3	Same as above	0.01Hz	15.00Hz	O	0 ~ 30000
C0.03	Preset frequency 4	Same as above	0.01Hz	20.00Hz	O	0 ~ 30000
C0.04	Preset frequency 5	Same as above	0.01Hz	25.00Hz	O	0 ~ 30000
C0.05	Preset frequency 6	Same as above	0.01Hz	30.00Hz	O	0 ~ 30000
C0.06	Preset frequency 7	Same as above	0.01Hz	35.00Hz	O	0 ~ 30000
C0.07	Preset frequency 8	Same as above	0.01Hz	40.00Hz	O	0 ~ 30000
C0.08	Preset frequency 9	Same as above	0.01Hz	45.00Hz	O	0 ~ 30000
C0.09	Preset frequency10	Same as above	0.01Hz	50.00Hz	O	0 ~ 30000
C0.10	Preset frequency11	Same as above	0.01Hz	10.00Hz	O	0 ~ 30000
C0.11	Preset frequency12	Same as above	0.01Hz	20.00Hz	O	0 ~ 30000
C0.12	Preset frequency13	Same as above	0.01Hz	30.00Hz	O	0 ~ 30000
C0.13	Preset frequency14	Same as above	0.01Hz	40.00Hz	O	0 ~ 30000
C0.14	Preset frequency15	Same as above	0.01Hz	50.00Hz	O	0 ~ 30000
Group C1.Process PID parameters						
C1.00	Close-loop control function	0: Disable 1: Enable	1	0	X	0 ~ 1
C1.01	Reference channel selection	0: Digital input 1: AI1 2: AI2 3: Keyboard potentiometer	1	1	O	0 ~ 3
C1.02	Feedback channel selection	0: AI1 1: AI2 2: AI1+AI2 3: AI1-AI2 4: MIN(AI1，AI2)	1	1	O	0 ~ 6

Function code	Name	Descriptions	Unit	Factory setting	Modif.	Setting range
		5: MAX(AI1，AI2) 6: DI				
C1.03	Digital setting ofreference	-10.00V ~ 10.00V	0.01	0.00	O	0 ~ 2000
C1.04	Close-loop speed reference	0 ~ 39000RPM	1RPM	0	O	0 ~ 39000
C1.05	Min reference	0.0% ~ (C1.07)(Ratio of Min reference to base value of 10V/20mA)	0.1%	0.0%	O	0 ~ 1000
C1.06	Feedback value corresponding to the Min reference	0.0 ~ 100.0%(Ratio of Min reference to base value of 10V/20mA)	0.1%	0.0%	O	0 ~ 1000
C1.07	Max reference	(A01.05) ~ 100.0%(Ratio of Max reference to base value of 10V/20mA)	0.1%	100.0%	O	0 ~ 1000
C1.08	Feedback value corresponding to the Max reference	0.0 ~ 100%(Ratio of Max reference to base value of 10V/20mA)	0.1%	100.0%	O	0 ~ 1000
C1.09	Proportional gain KP	0.000 ~ 10.000	0.001	2.000	O	0 ~ 10000
C1.10	Integral gain Ki	0.000 ~ 10.000	0.001	0.100	O	0 ~ 10000
C1.11	Differential gain Kd	0.000 ~ 10.000	0.001	0.100	O	0 ~ 10000
C1.12	Sampling cycle T	0.01 ~ 50.00s	0.01s	0.50s	O	1 ~ 5000
C1.13	Output filter	0.01 ~ 10.00s	0.01s	0.05	O	1 ~ 1000
C1.14	Error limit	0.0 ~ 20.0%(Corresponding to close-loop reference)	0.1%	2.0%	O	0 ~ 200
C1.15	Close-loopregulation characteristic	0: Positive 1: Negative	1	0	X	0 ~ 1
C1.16	Integral regulation selection	0: Stop integral regulation when the frequency reaches the upper and lower limits 1: Continue the integral regulation when the frequency reaches the upper and lower limits	1	0	X	0 ~ 1
C1.17	Preset close-loop frequency	0.00 ~ 300.00Hz	0.01Hz	0.00Hz	O	0 ~ 30000
C1.18	Holding time of preset close-loop frequency	0.0 ~ 3600.0s	0.1s	0.0s	X	0 ~ 36000
C1.19	Preset close-loop reference 1	-10.00V ~ 10.00V	0.01V	0.00V	O	0 ~ 2000
C1.20	Preset close-loop reference 2	-10.00V ~ 10.00V	0.01V	0.00V	O	0 ~ 2000
C1.21	Preset close-loop reference 3	-10.00V ~ 10.00V	0.01V	0.00V	O	0 ~ 2000
C1.22	Preset close-loop reference 4	-10.00V ~ 10.00V	0.01V	0.00V	O	0 ~ 2000
C1.23	Preset close-loop reference 5	-10.00V ~ 10.00V	0.01V	0.00V	O	0 ~ 2000

Function code	Name	Descriptions	Unit	Factory setting	Modif.	Setting range
C1.24	Preset close-loop reference 6	-10.00V ~ 10.00V	0.01V	0.00V	O	0 ~ 2000
C1.25	Preset close-loop reference 7	-10.00V ~ 10.00V	0.01V	0.00V	O	0 ~ 2000
C1.26	Preset close-loop reference 8	-10.00V ~ 10.00V	0.01V	0.00V	O	0 ~ 2000
C1.27	Preset close-loop reference 9	-10.00V ~ 10.00V	0.01V	0.00V	O	0 ~ 2000
C1.28	Preset close-loop reference 10	-10.00V ~ 10.00V	0.01V	0.00V	O	0 ~ 2000
C1.29	Preset close-loop reference 11	-10.00V ~ 10.00V	0.01V	0.00V	O	0 ~ 2000
C1.30	Preset close-loop reference 12	-10.00V ~ 10.00V	0.01V	0.00V	O	0 ~ 2000
C1.31	Preset close-loop reference 13	-10.00V ~ 10.00V	0.01V	0.00V	O	0 ~ 2000
C1.32	Preset close-loop reference 14	-10.00V ~ 10.00V	0.01V	0.00V	O	0 ~ 2000
C1.33	Preset close-loop reference 15	-10.00V ~ 10.00V	0.01V	0.00V	O	0 ~ 2000
C1.34	Close-loop output reversal selection	0: The close-loop output is negative, the drive will operate at zero frequency. 1: The close-loop output is negative, and the drive operate reverse.	1	0	O	0 ~ 1
C1.35	Sleep function selection	0: Disable 1: Enable.	1	0	O	0 ~ 1
C1.36	Sleep level	0.0 ~ 100.0%	0.1%	50.0%	O	0 ~ 1000
C1.37	Sleep latency	0.0 ~ 6000.0s	0.1s	30.0s	O	0 ~ 6000
C1.38	Wake-up level	0.0 ~ 100.0%	0.1%	50.0%	O	0 ~ 1000
C2.Simple PLC						
C2.00	Simple PLC operationmode selector	Unit's place of LED: PLC operation mode 0: No function 1: Stop after single cycle 2: Keep final states after single cycle 3: Continuous cycle Ten's place of LED: Start mode 0: Start from first step 1: Start from the step before stop (or alarm). 2: Start from the step and frequency before stop (or alarm) Hundred's place of LED: Storage after power off	1	0000	X	0 ~ 1123H

Function code	Name	Descriptions	Unit	Factory setting	Modif.	Setting range
		0: Disable 1: Save the segment frequency when power off Thousand's place of LED: Time unit selector for each step 0: Second 1: Minute				
C2.01	Step 1 setting	Unit's of LED: 0: Multiple frequency N (Ncorresponding to current step) 1: Defined by A0.02 2: Multiple closed-loop reference N (Ncorresponding to current step) 3: Defined by C1.01 Ten's place of LED: 0: Forward 1: Reverse 2: Defined by operation command Hundred's place of LED: 0: Acc/Dec time 1 1: Acc/Dec time 2 2: Acc/Dec time 3 3: Acc/Dec time 4	1	000	O	0 ~ 323H
C2.02	Step 1 operating time	0.0 ~ 6500.0	0.1	20.0	O	0 ~ 65000
C2.03	Step 2 setting	Same as C2.01	1	000	O	0 ~ 323H
C2.04	Step 2 operating time	0.0 ~ 6500.0	0.1	20.0	O	0 ~ 65000
C2.05	Step 3 setting	Same as C2.01	1	000	O	0 ~ 323H
C2.06	Step 3 operating time	0.0 ~ 6500.0	0.1	20.0	O	0 ~ 65000
C2.07	Step 4setting	Same as C2.01	1	000	O	0 ~ 323H
C2.08	Step 4 operating time	0.0 ~ 6500.0	0.1	20.0	O	0 ~ 65000
C2.09	Step 5 setting	Same as C2.01	1	000	O	0 ~ 323H
C2.10	Step 5 operating time	0.0 ~ 6500.0	0.1	20.0	O	0 ~ 65000
C2.11	Step 6 setting	Same as C2.01	1	000	O	0 ~ 323H
C2.12	Step 6 operating time	0.0 ~ 6500.0	0.1	20.0	O	0 ~ 65000
C2.13	Step 7 setting	Same as C2.01	1	000	O	0 ~ 323H
C2.14	Step 7 operating time	0.0 ~ 6500.0	0.1	20.0	O	0 ~ 65000
C2.15	Step 8 setting	Same as C2.01	1	000	O	0 ~ 323H
C2.16	Step 8 operating time	0.0 ~ 6500.0	0.1	20.0	O	0 ~ 65000
C2.17	Step 9 setting	Same as C2.01	1	000	O	0 ~ 323H
C2.18	Step 9 operating time	0.0 ~ 6500.0	0.1	20.0	O	0 ~ 65000
C2.19	Step 10 setting	Same as C2.01	1	000	O	0 ~ 323H
C2.20	Step 10 operating time	0.0 ~ 6500.0	0.1	20.0	O	0 ~ 65000
C2.21	Step 11 setting	Same as C2.01	1	000	O	0 ~ 323H
C2.22	Step 11 operating time	0.0 ~ 6500.0	0.1	20.0	O	0 ~ 65000
C2.23	Step 12 setting	Same as C2.01	1	000	O	0 ~ 323H

Function code	Name	Descriptions	Unit	Factory setting	Modif.	Setting range
C2.24	Step 12 operating time	0.0 ~ 6500.0	0.1	20.0	O	0 ~ 65000
C2.25	Step 13 setting	Same as C2.01	1	000	O	0 ~ 323H
C2.26	Step 13 operating time	0.0 ~ 6500.0	0.1	20.0	O	0 ~ 65000
C2.27	Step 14 setting	Same as C2.01	1	000	O	0 ~ 323H
C2.28	Step 14 operating time	0.0 ~ 6500.0	0.1	20.0	O	0 ~ 65000
C2.29	Step 15 setting	Same as C2.01	1	000	O	0 ~ 323H
C2.30	Step 15 operating time	0.0 ~ 6500.0	0.1	20.0	O	0 ~ 65000
Group C3.textile swing function						
C3.00	Tex tile function selection	0: Not choose textile function 1: Select textile function	1	0	X	0 ~ 1
C3.01	Swing frequency operation	LED unit position: starting mode 0: automatic 1: terminal manual LED ten position: swing control 0: Relative center frequency 1: Relative maximum frequency LED Hundreds: Swing Frequency State Memory 0: shutdown memory 1: stop without memory LED Thousands: Swing Frequency Status Power Down Storage 0: storage 1: not stored	1	0000	X	0 ~ 11111H
C3.02	Swing frequency preset frequency	0.00Hz ~ upper limit frequency	0.01Hz	0.00Hz	O	0 ~ 30000
C3.03	Swing frequency preset frequency waiting time	0.0 ~ 3600.0s	0.1s	0.0s	O	0 ~ 36000
C3.04	Swing frequency amplitude	0.0% ~ 50.0%	0.1%	0.0%	O	0 ~ 500
C3.05	Mutation frequency	0.0% ~ 50.0%	0.1%	0.0%	O	0 ~ 500
C3.06	Wobble cycle	0.1 ~ 999.9s	0.1s	10.0s	O	1 ~ 9999
C3.07	Triangle wave rise time	0.0% ~ 100.0% (refer to the swing frequency period)	0.1%	50.0%	O	0 ~ 1000
Group d0.Status display						
d0.00	Main reference frequency	-300.00 ~ 300.00Hz	0.01Hz	0.00	*	0 ~ 60000
d0.01	Auxiliary reference frequency	-300.00 ~ 300.00Hz	0.01Hz	0.00	*	0 ~ 60000
d0.02	Preset frequency	-300.00 ~ 300.00Hz	0.01Hz	0.00	*	0 ~ 60000
d0.03	Frequency after Acc/Dec	-300.00 ~ 300.00Hz	0.01Hz	0.00	*	0 ~ 60000
d0.04	Output frequency	-300.00 ~ 300.00Hz	0.01Hz	0.00	*	0 ~ 60000
d0.05	Output voltage	0 ~ 60000V	1V	0	*	0 ~ 60000
d0.06	Output current	0.0 ~ 3Ie	0.1A	0.0	*	0 ~ 65535
d0.07	Torque current	-300.0 ~ +300.0%	0.1%	0.0%	*	0 ~ 6000
d0.08	Magnetic flux current	0 ~ +100.0%	0.1%	0.0%	*	0 ~ 1000

Function code	Name	Descriptions	Unit	Factory setting	Modif.	Setting range
d0.09	Motor power	0.0 ~ 200.0%(Corresponding to the motor's rated power)	0.1%	0.0%	*	0 ~ 2000
d0.10	Motor estimated frequency	-300.00 ~ 300.00Hz	0.01	0.00	*	0 ~ 60000
d0.11	Motor actual frequency	-300.00 ~ 300.00Hz	0.01	0.00	*	0 ~ 60000
d0.12	Bus voltage	0 ~ 800V	1V	0	*	0 ~ 800
d0.13	Drive operation status	0 ~ FFFH bit0: Run/Stop bit1: Reverse/Forward bit2: Operating at zero frequency bit3: Accelerating bit4: Decelerating bit5: Operating at constant speed bit6: Pre-commutation bit7: Tuning bit8: Over-current limiting bit9: DC over-voltage limiting bit10: Torque limiting bit11: Speed limiting bit12: Drive fault bit13: Speed control bit14: Torque control bit15: Position control(Reserved)	1	0	*	0 ~ FFFFH
d0.14	Inputterminalsstatus	0 ~ FFH，0: OFF；1: ON	1	00	*	0 ~ FFH
d0.15	Output terminals status	0 ~ 1FH，0: OFF；1: ON	1	0	*	0 ~ 1FH
d0.16	AI1 input	-10.00 ~ 10.00V	0.01V	0.00	*	0 ~ 2000
d0.17	AI2 input	-10.00 ~ 10.00V	0.01V	0.00	*	0 ~ 2000
d0.18	Keyboard potentiometer input	-10.00 ~ 10.00V	0.01V	0.00	*	0 ~ 2000
d0.19	Percentage of AI1 after regulation	-100.00% ~ 110.00%	0.01%	0.00	*	0 ~ 20000
d0.20	Percentage of AI2 after regulation	-100.00% ~ 110.00%	0.01%	0.00	*	0 ~ 20000
d0.21	Percentage of Keyboard potentiometer after regulation	-100.00% ~ 110.00%	0.01%	0.00	*	0 ~ 20000
d0.22	AO1 output	0.0 ~ 100.0% (Ratio of the full range)	0.1%	0.0%	*	0 ~ 1000
d0.23	AO2 output	0.0 ~ 100.0% (Ratio of the full range)	0.1%	0.0%	*	0 ~ 1000
d0.24	Process close-loop reference	-100.0 ~ 100.0%(Ratio of the full range)	0.1%	0.0%	*	0 ~ 2000
d0.25	Process close-loop feedback	-100.0 ~ 100.0%(Ratio of the full range)	0.1%	0.05%	*	0 ~ 2000
d0.26	Process close-loop error	-100.0 ~ 100.0%(Ratio of the full range)	0.1%	0.0%	*	0 ~ 2000
d0.27	Process close-loop	-100.0 ~ 100.0%(Ratio of the full range)	0.1%	0.0%	*	0 ~ 2000
d0.28	Temperature of heatsink 1	0.0 ~ 150.0℃	0.1℃	0.0	*	0 ~ 1500
d0.29	Temperature of heatsink 2	0.0 ~ 150.0℃	0.1℃	0.0	*	0 ~ 1500

Function code	Name	Descriptions	Unit	Factory setting	Modif.	Setting range
d0.30	Total conduction time	0 ~ 65535 hours	1 hours	0	*	0 ~ 65535
d0.31	Total operating time	0 ~ 65535 hours	1 hours	0	*	0 ~ 65535
d0.32	Total fan's operating time	0 ~ 65535 hours	1 hours	0	*	0 ~ 65535
d0.33	ASR controller output	-300.0 ~ 300.0% (Corresponding to drive's rated torque)	0.1%	0.0%	*	0 ~ 6000
d0.34	Reference torque	-300.0 ~ 300.0% (Corresponding to drive's rated torque)	0.1%	0.0%	*	0 ~ 6000
d0.35	Zero offset of AI1	0 ~ 65535	1	0	*	0 ~ 65535
d0.36	Zero offset of AI2	0 ~ 65535	1	0	*	0 ~ 65535
d0.37	Zero offset of Keyboard potentiometer	0 ~ 65535	1	0	*	0 ~ 65535
d0.38 ~ d0.39	Reserved	-	-	-	-	-
d0.40	Operating counter value	0 ~ 65535	1	0	*	0 ~ 65535
d0.41 ~ d0.45	Reserved	-	-	-	-	-
Group d1.Fault record						
d1.00	Fault record 1	0: No fault records 1: Hardware over current during acceleration. 2: Hardware over current during deceleration. 3: Hardware over current during running in constant speed. 4: Hardware over voltage during acceleration. 5: Hardware over voltage during deceleration. 6: Hardware over voltage during running in constant speed. 7: Input voltage is too high 8: Input phase loss (E008) 9: Output phase failure (E009) 10: 22kw and above models.IGBT module is detected voltage drop too large. (IGBT module protection) 11: IGBT module's heatsink overheat. 12: Rectifer'sheatsink over heat. 13: Running current is larger than VFD rated current for long time. 14: Running current is larger than motor rated current for long time. 15: External device fault.	1	0	*	0 ~ 50

Function code	Name	Descriptions	Unit	Factory setting	Modif.	Setting range
		16: EEPROM R/W fault (E016) 17: VFD cannot get communication with host. 18: Power board/drive board/contactor damage causes contactor abnormal. 19: Hall/drive board abnormal causes current detective circuit fault. 20: Reserved (E020) 21 ~ 22: Reserved 23: Parameter copy error(E023) 24: Auto tunning fault in vector control.(E024) 25: Encoder signal fault in lose-loop control(E025) 26: VFD running current is detected smaller than set value of load lost(E026) 27: Brake unit failure(E027) 28 ~ 32: Reserved 33: VFD output is short circuit to earth (E033) 34: VFD running speed and encoder detected speed deviation exceeds allowed value.(E034) 35 ~ 39: Reserved 40: Extension card and control board SPIcommunication fault(E040) 41: Software detects overcurrent during accelerate 42: Software detects overcurrent during decelerate 43: Software detects overcurrent during constant speed Note: ①: E007 is not detected if the model is 18.5G/22G or blow. ②: Fault E010 can't be reset until delaying 10 seconds. ③: The over-current fault can't be reset until delaying 6 seconds. ④: The keypad will display fault AXXX when fault warning appears. (For example, when contactor failure, the keypad will display E018 if it is action protection, and the keypad will display A018 if it is warning and continue to run).				

Function code	Name	Descriptions	Unit	Factory setting	Modif.	Setting range
d1.01	Bus voltage of the latest failure	0 ~ 999V	1V	0V	*	0 ~ 999
d1.02	Actual current of the latest failure	0.0 ~ 999.9A	0.1A	0.0A	*	0 ~ 9999
d1.03	Operation frequency of the latest failure	0.00Hz ~ 300.00Hz	0.01Hz	0.00Hz	*	0 ~ 30000
d1.04	Operation status of the latest failure	0 ~ FFFFH	1	0000	*	0 ~ FFFFH
d1.05	Fault record 2	0 ~ 55	1	0	*	0 ~ 50
d1.06	Fault record 3	0 ~ 55	1	0	*	0 ~ 50
Group d2.Product Identity Parameters						
d2.00	Serial number	0 ~ FFFF	1	100	*	0 ~ 65535
d2.01	Software version number	0 ~ 65535	1	100	*	0 ~ 65535
d2.02	Custom-made version number	0 ~ 65535	1	0	*	0 ~ 65535
d2.03	Load type selection	0: Heavy load G; 1: Light load L; 2: Serging type load B; 3: 2-phase type load; 4 ~ 9: Reserved	1	0	-	0 ~ 9
d2.04	Rated capacity	Output power ,0 ~ 999.9KVA (Dependent on drive's model)	0.1 KVA	Factory setting	*	0 ~ 9999
d2.05	Rated voltage	0 ~ 60000V (Dependent on drive's model)	1V	Factory setting	*	0 ~ 999
d2.06	Per unit rated current	0 ~ 999.9A (Dependent on drive's model)	0.1A	Factory setting	*	0 ~ 9999
d2.07	Software date	0 ~ 65535	1	0	*	0 ~ 65535
Group U0.Factory parameters						
U0.00	Factory password	**** Note: Other parameters in this group can't display until entering the right password.	1	Factory setting	-	0 ~ FFFF

Kinco® Automation

[上海]：上海市浦东新区张江高科技园区秋月路26号3幢 (201210)
电话：021-6879 8588　　传真：021-6879 7688

[深圳]：深圳市南山区高新科技园北区朗山一路6号1栋 (518057)
电话：0755-2658 5555　　传真：0755-2661 6372

Shanghai Kinco Automation Co.,Ltd.
Add: Building No.3, Qiuyue Road, Zhangjiang Hi-Tech Park,
Pudong District, Shanghai, China. 201210
Tel: +86-21-6879 8588
Fax: +86-21-6879 7688

Kinco Electric (Shenzhen) Ltd.
Add: Building 1, No.6 Langshan 1st Road, Hi-tech Park North,
Nanshan District, Shenzhen, China. 518057
Tel: +86-755-2658 5555
Fax: +86-755-2661 6372

Email: sales@kinco.cn　　**http://www.kinco.cn**

用户使用手册

USER'S MANUAL

K2M19-1809